Bloomfield, New Mexico
Water Treatment Plant Upgrade

DRAWING INDEX

SHEET No.	DRAWING No.	TITLE OF SHEET
	GENERAL	
1	1-G-1	COVER SHEET, INDEX OF DRAWINGS
2	1-G-2	ABBRIVIATIONS
3	1-G-3	ARCHITECTURAL NOTES & LEGEND
4	1-G-4	CIVIL LEGEND AND NOTES
5	1-G-5	GENERAL STRUCTURAL NOTES
6	1-G-6	MECHANICAL LEGEND SHEET 1 OF 2
7	1-G-7	MECHANICAL LEGEND SHEET 2 OF 2
	CIVIL	
8	5-C-1	EXISTING SITE UTILITY PLAN
9	5-C-2	CIVIL SITE PLAN
10	5-C-3	CIVIL GRADING PLAN
11	5-C-4	YARD PIPING PLAN
12	5-C-5	MISCELLANEOUS CIVIL DETAILS
13	5-C-6	TYPICAL - SECTIONS, STREET AND PARKING
14	5-C-7	GRADING CROSS SECTIONS
15	5-C-8	MISCELLANEOUS YARD PIPING DETAILS
16	5-C-9	MISCELLANEOUS YARD PIPING DETAILS
17	5-C-10	MISCELLANEOUS YARD PIPING DETAILS
18	5-C-11	MISCELLANEOUS YARD PIPING DETAILS
19	5-C-12	MISCELLANEOUS YARD PIPING DETAILS
	ARCHITECTURAL / STRUCTURAL	
20	10-AS-1	ARCHTECTURAL FLOOR PLAN
21	10-AS-2	STRUCTURAL FOUNDATION PLAN
22	10-AS-3	EXTERIOR ELEVATIONS
23	10-AS-4	BACKWASH PUMP STATION FOUNDATION PLAN / FLOOR PLAN AND ELEVATIONS
24	10-AS-5	STRUCTURAL SECTIONS AND DETAILS
25	10-AS-6	STRUCTURAL SECTIONS AND DETAILS
26	10-AS-7	STRUCTURAL SECTIONS AND DETAILS
	HVAC	
27	10-HV-1	HVAC FLOOR PLANS OF TREATMENT BUILDING AND BOOSTER PUMP STATION
	MECHANICAL	
28	10-M-1	MECHANICAL / PLUMBING FLOOR PLAN
29	10-M-2	MECHANICAL / PLUMBING SECTIONS
30	10-M-3	MECHANICAL / PLUMBING SECTIONS
31	10-M-4	MISCELLANEOUS MECHANICAL DETAILS
	INSTRUMENTATION AND CONTROLS	
32	60-I-1	I&C LEGEND SHEET 1 OF 2
33	60-I-2	I&C LEGEND SHEET 2 OF 2
34	60-I-3	PROCESS FLOW P&ID
35	60-I-4	PROCESS FLOW P&ID
36	60-I-5	PROCESS FLOW P&ID
37	60-I-6	PROCESS FLOW P&ID
38	60-I-7	PROCESS FLOW P&ID
	ELECTRICAL	
39	70-E-1	ELECTRICAL LEGEND
40	70-E-2	ELECTRICAL NOTES
41	70-E-3	ELECTRICAL SITE PLAN
42	70-E-4	EXISITNG AND FUTURE OVERALL ONE-LINE DIAGRAMS
43	70-E-5	MOTOR CONTROL DIAGRAMS
44	70-E-6	BACKWASH PUMP STATION, LIGHTING & PANEL SCHEDULE (ISSUED BY ADDENDUM)
45	70-E-7	TREATMENT BUILDING UNDER-SLAB CONDUIT ROUTING PLAN
46	70-E-8	TREATMENT BUILDING FACILITY PLAN (ISSUED BY ADDENDUM)
47	70-E-9	TREATMENT BUILDING PROCESS PLAN (ISSUED BY ADDENDUM)

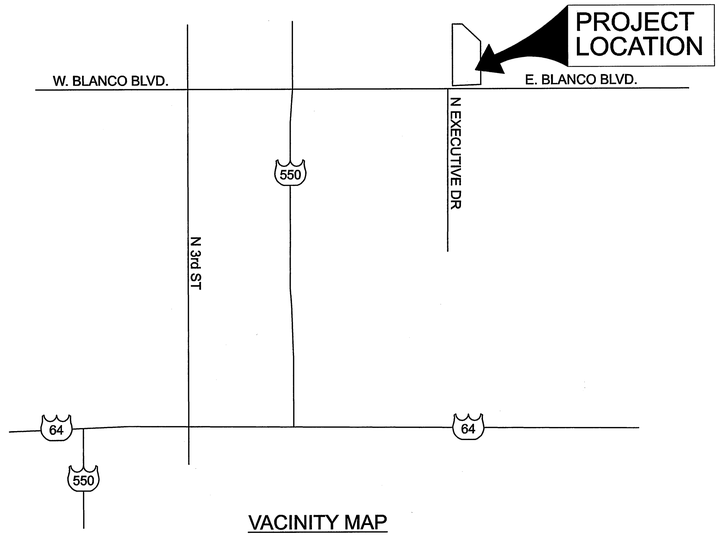

VACINITY MAP

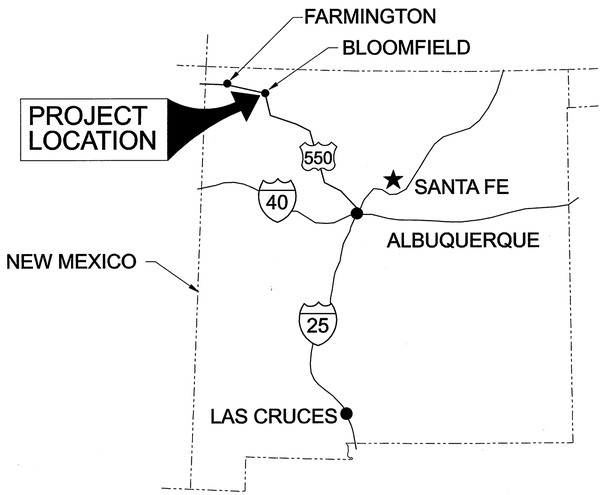

SITE LOCATION MAP

MICHAEL A. BREWER
NEW MEXICO
9376
REGISTERED PROFESSIONAL ENGINEER

RECORD DRAWINGS

Revisions Drawn by EJA Date 11/2007

THESE RECORD DRAWINGS HAVE BEEN PREPARED, IN PART, ON THE BASIS OF INFORMATION COMPILED BY OTHERS. THEY ARE NOT INTENDED TO REPRESENT IN DETAIL THE EXACT LOCATION, TYPE OF COMPONENT NOR MANNER OF CONSTRUCTION. THE ENGINEER WILL NOT BE RESPONSIBLE FOR ANY ERRORS OR OMISSIONS WHICH HAVE BEEN INCORPORATED INTO THE RECORD DRAWINGS.

NOVEMBER 2007

ABBREVIATIONS

AB	ANCHOR BOLT
ADDL	ADDITIONAL
AFF	ABOVE FINISH FLOOR
AL	ALUMINUM
ALTN	ALTERNATE
APPROX	APPROXIMATELY
ARCH	ARCHITECTURAL
ARV	AIR RELIEF VALVE
AVRV	AIR & VACUUM RELIEF VALVE
BFV	BUTTERFLY VALVE
BLDG	BUILDING
BOF	BOTTOM OF FOOTING
BOP	BEGINNING OF PATH
BOR	BEGINNING OF ROAD
BOT	BOTTOM
BF	BOTTOM FACE
BFP	BACK FLOW PREVENTOR
BM	BEAM, BENCHMARK
BRG	BEARING
C-2	CIVIL DRAWING 2ND SHEET
CCP	CONCRETE CYLINDER PIPE
CI	CAST IRON
CFM	CUBIC FEET PER MINUTE
CJ	CONSTRUCTION JOINT
℄, CL	CENTER LINE
CLR	CLEAR, CLEARANCE
COL	COLUMN
CONC	CONCRETE
CONT	CONTINUOUS
CPLG	COUPLING
CTR	CENTER
CTRD	CENTERED
DI OR DIP	DUCTILE IRON PIPE
DIA	DIAMETER
DWG	DRAWING
DN	DOWN
E-5	ELECTRICAL DRAWING 5TH SHEET
EA	EACH
EF	EACH FACE
EL OR ELEV	ELEVATION
EOP	END OF PATH
EOR	END OF ROAD
EQ	EQUAL
EW	EACH WAY
EWEF	EACH WAY EACH FACE
EXIST,EXST,EXTG	EXISTING
EXP JT	EXPANSION JOINT
FA	FACE
FCA	FLANGE COUPLING ADAPTER
FCO	FLOOR CLEAN OUT
FD	FLOOR DRAIN
FF	FINISH FLOOR
FG	FINISHED GRADE
FH	FIRE HYDRANT
FL, ℄	FLOW LINE
FLG	FLANGE
FT	FOOT (FEET)
G-1	GENERAL DRAWING 1ST SHEET
GA	GAUGE
GALV	GALVANIZED (HOT DIP)
GRTG	GRATING
GV	GATE VALVE
HB	HOSE BIB
HD	HUB DRAIN
HDD	HORIZONTAL DIRECTIONAL DRILL
HDPE	HIGH-DENSITY POLYETHYLENE PIPE
HORIZ	HORIZONTAL
HSB	HIGH STRENGTH BOLT
HT	HEIGHT
ID	INSIDE DIAMETER
IF	INSIDE FACE
JT	JOINT
KW	KILOWATT
LF	LINEAR FEET
LONG.	LONGITUDINAL
LT	LEFT
M-4	MECHANICAL DRAWING 4TH SHEET
MFR OR MFG	MANUFACTURER
MAX	MAXIMUM
MB	MACHINE BOLT
MECH	MECHANICAL
MH	MANHOLE
MJ	MECHANICAL JOINT
MPH	MILES PER HOUR
MIN	MINIMUM
NO	NUMBER
NOM	NOMINAL
NPW	NONPOTABLE WATER
NTS	NOT TO SCALE
OC	ON CENTER
OD	OUTSIDE DIAMETER, OVERFLOW DRAIN
OF	OUTSIDE FACE
OPNG	OPENING
PCC	POINT OF COMPOUND CURVE
PC	POINT OF CURVATURE
PE	PLAIN END
PI	POINT OF INTERSECTION
PJF	PREMOLDED JOINT FILLER
PL, PL	PLATE
PP	POWER POLE
PP-2	PLAN AND PROFILE DRAWING 2nd SHEET
PRC	POINT OF REVERSE CURVE
PRV	PRESSURE REDUCING RELIEF/VALVE
PSF	POUNDS PER SQUARE FOOT
PSI	POUNDS PER SQUARE INCH
PT	POINT OF TANGENT
PVC	POLYVINYL CHLORIDE
RCP	REINFORCED CONCRETE PIPE
RD	ROOF DRAIN
RDCR	REDUCER
REINF	REINFORCED
REQ'D	REQUIRED
RT	RIGHT
R/W, R.O.W.	RIGHT-OF-WAY
SAS	SANITARY SEWER
S-3	STRUCTURAL DRAWING 3RD SHEET
SCHD	SCHEDULE
SD	STORM DRAIN/SEWER
SG	SIGHT GLASS
SHT	SHEET
SIM	SIMILAR
SPA	SPACING
SPD	SUMP PUMP DISCHARGE
SPEC'D	SPECIFIED
SPECS	SPECIFICATIONS
SPRTS	SUPPORTS
SQ	SQUARE
SS OR SST	STAINLESS STEEL
STA	STATION
STD	STANDARD
STL OR ST	STEEL
TBM	TEMPORARY BENCH MARK
T&B	TOP AND BOTTOM
TC	TOP OF CURB/CONCRETE
TF	TOP FACE
TG	TOP OF GRADE
T.O.P.	TOP OF PIPE
T.O.	TOP OF
TP	TRAP PRIMER
TYP	TYPICAL
U.O.N.	UNLESS OTHERWISE NOTED
VERT	VERTICAL
VTR	VENT THRU ROOF
WM	WATER METER
WP	WORK POINT
WS	WELDED STEEL, WATERSTOP OR WATER SURFACE
WT	WEIGHT
WV	WATER VALVE
WWF	WELDED WIRE FABRIC

WTP PIPING SYSTEMS

AIR HIGH PRESSURE	AHP
BACKWASH AIR	BWA
BACKWASH SUPPLY	BWS
BACKWASH WASTE	BWW
CLAIRFIED WATER	CW
DRAIN, SANITARY	D
DRAIN, PROCESS	DR
FERRIC CHLORIDE	FC
FILTER INFLUENT	FI
FILTER EFFLUENT	FE
FILTER TO WASTE	FTW
FINISHED WATER	FW
NATURAL GAS	NG
OVERFLOW	OF
PLANT DRAIN	PD
POLYMER/POLYMER SOLUTION, (FILTER AID)	POA
POLYMER/POLYMER SOLUTION, NONANIONIC (SLUDGE CONDITIONING)	PON
RAW WATER	RW
SAMPLE	SP
SLUDGE WASTE	SLW
SLUDGE RECIRCULATION	SLR
SODIUM HYPOCHLORITE	SH
STORM DRAINAGE	SD
SANITARY SEWER	SS
SETTLED WATER	SW
VENT, AIR RELEASE	VAR
VENT (SANITARY)	V or VTR
VENT THROUGH ROOF	VTR
POTABLE WATER	W

© CH2M HILL

THIS DOCUMENT, AND THE IDEAS AND DESIGNS INCORPORATED HEREIN, AS AN INSTRUMENT OF PROFESSIONAL SERVICE, IS THE PROPERTY OF CH2M HILL AND IS NOT TO BE USED, IN WHOLE OR IN PART, FOR ANY OTHER PROJECT WITHOUT THE WRITTEN AUTHORIZATION OF CH2MHILL.

REUSE OF DOCUMENTS:

RECORD DRAWINGS

Revisions Drawn by EJA Date 11/2007

THESE RECORD DRAWINGS HAVE BEEN PREPARED, IN PART, ON THE BASIS OF INFORMATION COMPILED BY OTHERS. THEY ARE NOT INTENDED TO REPRESENT IN DETAIL THE EXACT LOCATION, TYPE OF COMPONENT NOR MANNER OF CONSTRUCTION. THE ENGINEER WILL NOT BE RESPONSIBLE FOR ANY ERRORS OR OMISSIONS WHICH HAVE BEEN INCORPORATED INTO THE RECORD DRAWINGS.

THESE DRAWINGS WERE MODIFIED USING AUTOCAD AND REPLOTTED FOR RECORD PURPOSES AND THEREFORE DO NOT HAVE THE ENGINEER'S STAMP OR OTHER SIGNATURES THAT APPEAR ON THE ORIGINAL CONTRACT DRAWINGS.

DSGN	A. FRIEDT
DR	E. ARMIJO
CHK	M. BREWER
APVD	M.BREWER

NO.	DATE	REVISION	BY	APVD

VERIFY SCALE

BAR IS ONE INCH ON ORIGINAL DRAWING. 0 ——— 1"

IF NOT ONE INCH ON THIS SHEET, ADJUST SCALES ACCORDINGLY.

Sdg inc. CH2MHILL

BLOOMFIELD, NEW MEXICO
WATER TREATMENT PLANT
UPGRADE

GENERAL

ABBREVIATIONS

SHEET	2 OF 47
DWG	1-G-2
DATE	JUNE 2006
PROJ	342630

FILENAME: 01_1G2D_342630.DWG PLOT DATE: 06/JUNE/2006 PLOT TIME: 00:00:00

GENERAL ARCHITECTURAL NOTES

1. UNLESS OTHERWISE INDICATED, PLAN DIMENSIONS ARE TO COLUMN GRID ON CENTERLINES, NOMINAL SURFACE OF MASONRY, FACE OF STUDS AND FACE OF CONCRETE WALLS.
2. "FLOOR LINE" REFERS TO TOP ON CONCRETE SLABS. FINISH FLOORING IS INSTALLED ABOVE THE FLOOR LINE. FOR DEPRESSED FLOORS AND CURBS, SEE STRUCTURAL DRAWINGS.
3. REPETITIVE FEATURES ARE NOT DRAWN IN THEIR ENTIRETY AND SHALL BE COMPLETELY PROVIDED AS IF DRAWN IN FULL.
4. WHERE DOOR IS LOCATED NEAR CORNER OF ROOM AND IS NOT LOCATED BY DIMENSION ON PLAN OR DETAILS, DIMENSION SHALL BE 3-INCHES FROM FACE OF STUD (WALL) TO FACE OF ROUGH OPENING. DIMENSION SHALL BE 6" FROM FACE OF WALL TO EDGE OF ROUGH OPENING AT CONCRETE WALLS, 8" AT CMU WALLS.
5. LINE OF EXISTING GRADES, AS SHOWN ON THE BUILDING ELEVATIONS AND SECTIONS ARE APPROXIMATE. THEY ARE AT THE BUILDING FACE, OR ON THE SECTION END EXCEPT AS NOTED.
6. VERIFY ALL ROUGH-IN DIMENSIONS FOR EQUIPMENT PROVIDED IN THIS CONTRACT, OR BY OTHERS.
7. FOR DOOR, FRAME, AND HARDWARE CHARACTERISTICS, SEE SPECIFICATION SECTION 13122, METAL BUILDING SYSTEMS.
8. REFER TO ARCHITECTURAL, STRUCTURAL, MECHANICAL, ELECTRICAL AND OTHER CATEGORIES OR DRAWINGS FOR ADDITIONAL NOTES.
9. VERIFY SIZE AND LOCATION OF, AND PROVIDE: REQUIRED OPENINGS THROUGH FLOORS AND WALLS, ACCESS DOORS, FURRING, CURBS, ANCHORS AND INSERTS. PROVIDE ALL BASES AND BLOCKING REQUIRED FOR ACCESSORIES, MECHANICAL, ELECTRICAL AND OTHER EQUIPMENT.

ARCH/STRUCT MATERIAL SYMBOLS

SYMBOL	LEGEND
	GRATING, SPAN DIRECTION INDICATED
	CHECKERED PLATE
	GROUT
	GRANULAR FILL
	EARTH OR FINISH GRADE
	CONCRETE
	CMU WALL (PLAN)
	CMU WALL (SECTION)
	MASONRY WALL
	METAL STUD WALL (PLAN)
	WOOD STUD WALL (PLAN)
	RIGID INSULATION
	BATT INSULATION
	STEEL
	ALUMINUM
	PLYWOOD
	GYPSUM WALLBOARD
	ACOUSTICAL TILE
	WOOD, ROUGH CONTINUOUS
	WOOD, ROUGH NON-CONTINUOUS
	WOOD, FINISHED

ARCHITECTURAL/STRUCTURAL LEGEND

SYMBOL	LEGEND
A	COLUMN GRID NUMBER OR LETTER
ROOM NAME XX101 OR ROOM NAME 101	ROOM NUMBER
"XX" = FACILITY NUMBER (IF SHOWN); XX101A OR 101A; ROOM LETTER; DOOR NUMBER	DOOR NUMBER
XXW-1 OR W-1	WINDOW NUMBER
XXR-1 OR R-1	RELIGHT NUMBER
XXL-1 OR L-1	LOUVER NUMBER
1 — DIRECTION SHOWN	INTERIOR ELEVATION
A	WALL TYPE
P-1	PRECAST PANEL NUMBER
S-1	SIGN NUMBER
⊗ 110.50	SPOT ELEVATION
	DIRECTION OF SLOPE DOWN
1 / XX-S-1 — LINE INDICATES DIRECTION AND EXTENT OF DETAIL CUT	DETAIL REFERENCE
HINGE SIDE	DOOR/HATCH SWING
ACTIVE; INACTIVE	INDICATES PAIR OF DOORS
F.EXT-X	FIRE EXTINGUISHER "X" = NUMBER IN SPECIFICATIONS
	CONTROL JOINT
	EXPANSION JOINT
POST	RAILINGS

CODE COMPLIANCE DATA

GOVERNING CODES:

ALL CONSTRUCTION TO COMPLY WITH ALL APPLICABLE CODES LISTED, BUT NOT LIMITED TO:

INTERNATIONAL BUILDING CODE, 2003 EDITION

INTERNATIONAL FUEL GAS CODE, 2003 EDITION

INTERNATIONAL PLUMBING CODE, 2003 EDITION

INTERNATIONAL MECHANICAL CODE, 2003 EDITION

INTERNATIONAL FIRE CODE, 2003 EDITION

NATIONAL ELECTRICAL CODE, 2005 EDITION

CODE DATA:

OCCUPANCY CLASSIFICATION:	FACTORY GROUP F-1 (SECTION 306)
CONSTRUCTION TYPE:	TYPE IIB UNPROTECTED (TABLE 601)
ALLOWABLE FLOOR AREA:	15,500 SF PER FLOOR (TABLE 503)
ACTUAL FLOOR AREA:	4,500 GSF
ALLOWABLE HEIGHT:	55 FEET (TABLE 503)
ACTUAL HEIGHT:	24 FEET
ALLOWABLE NUMBER OF STORIES:	2 (TABLE 503)
ACTUAL NUMBER OF STORIES:	1

GENERAL NOTE

1. THIS IS A STANDARD LEGEND SHEET. THEREFORE, NOT ALL OF THE INFORMATION SHOWN MAY BE USED ON THIS PROJECT.

RECORD DRAWINGS

Revisions Drawn by EJA Date 11/2007

THESE RECORD DRAWINGS HAVE BEEN PREPARED, IN PART, ON THE BASIS OF INFORMATION COMPILED BY OTHERS. THEY ARE NOT INTENDED TO REPRESENT IN DETAIL THE EXACT LOCATION, TYPE OF COMPONENT NOR MANNER OF CONSTRUCTION. THE ENGINEER WILL NOT BE RESPONSIBLE FOR ANY ERRORS OR OMISSIONS WHICH HAVE BEEN INCORPORATED INTO THE RECORD DRAWINGS.

LIFE SAFETY LEGEND:

36" ← ---- WIDTH OF EGRESS OPENING AND TRAVEL DISTANCE (TD) TO GRADE

FEXT-2 — PORTABLE FIRE EXTINGUISHER, SEE SPECIFICATION SECTION 10520 PORTABLE FIRE AND SAFETY EQUIPMENT

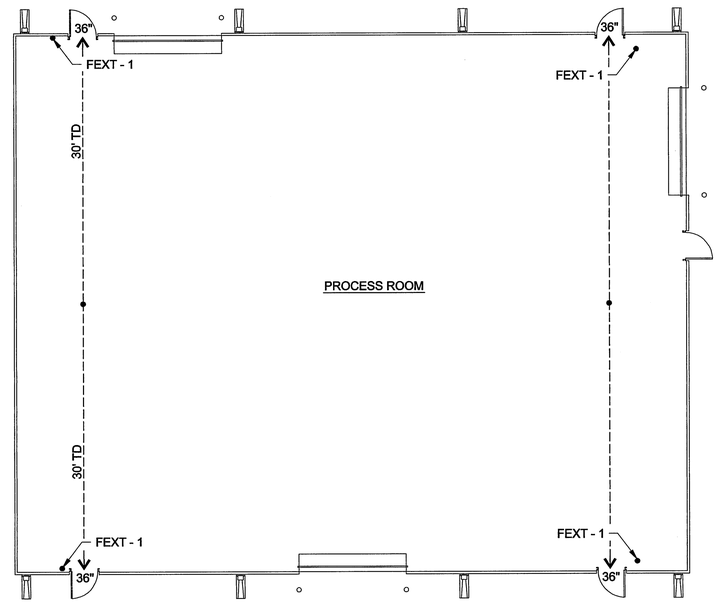

LIFE SAFETY PLAN

1/8" = 1'-0"

©CH2M HILL

THIS DOCUMENT, AND THE IDEAS AND DESIGNS INCORPORATED HEREIN, AS AN INSTRUMENT OF PROFESSIONAL SERVICE, IS THE PROPERTY OF CH2M HILL AND IS NOT TO BE USED, IN WHOLE OR IN PART, FOR ANY OTHER PROJECT WITHOUT THE WRITTEN AUTHORIZATION OF CH2MHILL.

REUSE OF DOCUMENTS:

THESE DRAWINGS WERE MODIFIED USING AUTOCAD AND REPLOTTED FOR RECORD PURPOSES AND THEREFORE DO NOT HAVE THE ENGINEER'S STAMP OR OTHER SIGNATURES THAT APPEAR ON THE ORIGINAL CONTRACT DRAWINGS.

DSGN	R. LECZNAR
DR	E. ARMIJO
CHK	M. NANNINGA
APVD	M. NANINGA

NO.	DATE	REVISION	BY	APVD

VERIFY SCALE

BAR IS ONE INCH ON ORIGINAL DRAWING. 0 1"

IF NOT ONE INCH ON THIS SHEET, ADJUST SCALES ACCORDINGLY.

Sdg Inc. CH2MHILL

BLOOMFIELD, NEW MEXICO
WATER TREATMENT PLANT
UPGRADE

GENERAL
ARCHITECTURAL NOTES & LEGEND

SHEET	3 OF 47
DWG	1-G-3
DATE	MAY 2006
PROJ	342630

FILENAME: 01_1G3D_342630.DGN PLOT DATE: 09-MAY-2006 PLOT TIME: 00:00:00

LEGEND		EXISTING = SCREENED NEW = BOLD
INV.	=	MANHOLE INVERT
F.F.	=	FINISHED FLOOR ELEVATION
M.H.	=	MANHOLE
T.C.	=	TOP OF CURB ELEVATION
GR.	=	GROUND ELEVATION
S.W.	=	SIDEWALK ELEVATION
G.P.	=	GUTTER PAN
18" W	=	18" WATER MAIN
U.E.	=	UNDERGROUND ELECTRIC
	=	GATE VALVE
	=	CONCRETE TEST CYLINDERS USED AS BORDER
C.I.	=	CAST IRON PIPE
4" SAS	=	SANITARY SEWER
	=	ELEVATIONS SHOT BY CITY
XFMR	=	ELECTRIC TRANSFORMER
CP	=	TELEPHONE PEDESTAL
	=	UTILITY POLE
S	=	SIGN
GAS	=	GAS
HV-19 5500.95	=	CONTROL POINT
	=	FENCE
	=	EDGE OF TREES
	=	LANDSCAPE ROCK
	=	SOD
	=	CONCRETE CURB & GUTTER
	=	ROADS (PAVED)
	=	ROADS (AGGREGATE BASE)
S S S	=	SILT FENCE
	=	SIDEWALK (S.W.)
	=	CMP CULVERTS
	=	WIRE ENCLOSED RIPRAP
	=	DITCH
OBSCURED	=	PHOTOGRAMMETRIC COVERAGE LIMITED DUE TO VEGETATION
	=	EXISTING UTILITY LINES (APPROXIMATE LOCATION)

FIELD TESTING SUMMARY

	ITEM	NUMBER OF TESTS	REQUIREMENT
ORIGINAL GROUND SURFACE BEFORE FILL	AFTER CLEARING, SCARIFY TO A MIN. DEPTH OF 8" & CONDITION TO OPTIMUM MOISTURE. ONE TEST FOR EACH 1,500 SQ. FT. UNDER NEW FILL		100% ASTM D698
ENGR. FILL UNDER FLOOR & PARKING	ONE DENSITY TEST PER EACH 2,500 SQ. FT. OF FILL PER EACH 10" LIFT.		100% ASTM D698
OVERFLOW POND	ONE DENSITY TEST OF SUBGRADE FOR EVERY 2,500 SQUARE FEET.		100% ASTM D698
CMP CULV., PIPE, AND RIPRAP	ONE DENSITY TEST OF BACKFILL AT EACH INSTALLATION (EXCLUDING PIPE ZONE).		100% ASTM D698
CONCRETE CURB & GUTTER	ONE DENSITY TEST OF SUBGRADE PER 100 FEET.		100% AASHTO T99
CONCRETE SIDEWALK	ONE DENSITY TEST OF SUBGRADE AT EACH INSTALLATION.		100% AASHTO T99
SUBGRADE FOR ALL AREAS UNDER AGGREGATE BASE	ONE DENSITY TEST OF SUBGRADE FOR EVERY 2,500 SQUARE FEET.		100% AASHTO T99
BASE COURSE (6" & 8")	ONE DENSITY TEST FOR EVERY 2,500 SQUARE FEET.		96% AASHTO T180 (METHOD D).
BASE COURSE	ONE AGGREGATE GRADATION PER 5,000 SQ. FEET.		NMSH&TD (TYPE I or II).
PLANT MIX BITUMINOUS PAVEMENT (NO RAP)	ONE DENSITY TEST FOR EVERY 2,500 SQ. FEET.		95% AASHTO T166
PLANT MIX BITUMINOUS PAVEMENT	TWO SETS OF TESTS FOR EXTRACTION, GRADATION, FRACTURED FACES, MAX. SPECIFIC GRAVITY, NUCLEAR DENSITY, AND MARSHALL BRIQUETTES.		NMSH&TD (TYPE I-C).
CONCRETE FOR CURB & GUTTER & SIDEWALK	TWO SETS OF SLUMP, AIR, AND COMPRESSION TESTS. PROVIDE CYLINDERS FOR 7, 14, & 28 DAY BREAKS.		NMSH&TD Class A
POND LINER	DESTRUCTIVE SEAM TESTING - ONE PER 500 FEET. NON DESTRUCTIVE - FULL LENGTH.		PER SPECIFICATIONS
REINFORCED CONC. SLAB	REFER TO STRUCTURAL DRAWINGS		
OVER EXC. FOR SLAB & FOOTINGS	REFER TO STRUCTURAL DRAWINGS		

Note: REFER TO APPLICABLE TECHNICAL SPECIFICATIONS FOR COMPLETE DESCRIPTION OF TESTING PROCEDURES.

GENERAL NOTES:

1. UTILITY LOCATION : THE CONTRACTOR SHALL BE RESPONSIBLE FOR LOCATION OF ALL UTILITIES, AND SHALL NOT RELY ON THESE CONSTRUCTION PLANS FOR EXACT LOCATIONS. NOTIFICATION OF UTILITY COMPANIES SHALL BE REQUIRED PRIOR TO COMMENCING WORK. ALSO, DISCUSS THE LOCATION OF ALL BURIED PIPE AND CABLES WITH THE MAINTENANCE STAFF PRIOR TO STARTING ANY CONSTRUCTION.

2. EROSION CONTROL: THE CONTRACTOR SHALL IMPLEMENT THE NECESSARY SITE EROSION CONTROL PLANS AND DEVICES FOR INHIBITING DUST MOVEMENT AND SOIL EROSION OFF SITE DURING ALL PHASES OF CONSTRUCTION.

3. SIGNS: CONTRACTOR SHALL REMOVE, STORE AND REPLACE ALL SIGNS DISTURBED DURING CONSTRUCTION. THIS SHALL BE CONSIDERED INCIDENTAL TO THE PROJECT.

4. SURVEYING: AERIAL PHOTOGRAPHY & TOPOGRAPHIC MAPPING BY THOMAS R. MANN & ASSOCIATES, INC. (FLIGHT DATE: AUGUST 20, 2003)

5. CONSTRUCTION STAKING: THE CONTRACTOR SHALL BE RESPONSIBLE FOR ALL CONSTRUCTION STAKING REQUIRED ON THE PROJECT. THIS SHALL BE INCIDENTAL TO THE PROJECT.

6. SAFETY PRECAUTIONS: THE CONTRACTOR SHALL BE RESPONSIBLE FOR INITIATING, MAINTAINING, AND SUPERVISING ALL SAFETY PRECAUTIONS AND PROGRAMS IN CONNECTION WITH THE WORK, INCLUDING COMPLIANCE WITH ALL OSHA REGULATIONS.

7. PICTURES OF EXISTING CONDITIONS: PRIOR TO BEGINNING ANY CONSTRUCTION, THE CONTRACTOR SHALL TAKE A MINIMUM OF TWO PHOTOS OR VIDEOS AT EACH 100' STATION OF THE ENTIRE PROJECT. THIS WORK SHALL BE INCIDENTAL TO THE PROJECT. THESE PHOTOS ARE TO ASSIST CONTRACTOR AND OWNER IN SETTLING ANY DISPUTES REGARDING DAMAGE TO ADJOINING FACILITIES.

8. TESTING: CONTRACTOR SHALL PROVIDE ALL TESTING AS OUTLINED IN CONTRACT DOCUMENTS. THE COST OF TESTING SHALL BE INCIDENTAL TO THE PROJECT.

9. TRAFFIC CONTROL: ALL TRAFFIC CONTROL DURING CONSTRUCTION SHALL BE IN ACCORDANCE WITH THE MILLENNIUM EDITION OF THE "MANUAL ON UNIFORM TRAFFIC CONTROL DEVICES," AND THE 2000 EDITION AND SUPPLEMENTS OF THE "NMSH&TD STANDARD SPECIFICATIONS FOR HIGHWAY AND BRIDGE CONSTRUCTION." ALL TRAFFIC CONTROL SHALL BE INCIDENTAL TO THE PROJECT.

10. SOILS REPORT: A GEOTECHNICAL ENGINEERING REPORT DATED APRIL 21, 2006 PLUS ADDENDUM NO. 1 DATED JUNE 1, 2006 WERE PREPARED BY GEOMAT, INC. IN FARMINGTON, NM [PH. (505-327-7928)]. THE CONTRACTOR SHALL REVIEW THESE REPORTS. ANY ITEMS NOT COVERED IN THE DRAWINGS AND CONTRACT DOCUMENTS SHALL BE UNDERTAKEN IN ACCORDANCE WITH THE SOILS REPORT.

RECORD DRAWINGS
THESE RECORD DRAWINGS HAVE BEEN PREPARED ON THE BASIS OF INFORMATION COMPILED AND FURNISHED BY CONTRACTOR AND OTHERS.
THE ENGINEER WILL NOT BE RESPONSIBLE FOR ANY ERRORS OR OMISSIONS WHICH HAVE BEEN INCORPORATED INTO THIS DOCUMENT AS A RESULT.
DATE: 11/16/07

© SULLIVAN DESIGN GROUP, INC.
THIS DOCUMENT, AND THE IDEAS AND DESIGNS INCORPORATED HEREIN, AS AN INSTRUMENT OF PROFESSIONAL SERVICE, IS THE PROPERTY OF SULLIVAN DESIGN GROUP, INC. AND IS NOT TO BE USED, IN WHOLE OR IN PART, FOR ANY OTHER PROJECT WITHOUT THE WRITTEN AUTHORIZATION OF SULLIVAN DESIGN GROUP, INC.
REUSE OF DOCUMENTS:

WALTER L. WILLIAMS NEW MEXICO 9080 REGISTERED PROFESSIONAL ENGINEER

DSGN	WLW
DR	MAS
CHK	JMS
APVD	Approved_By

NO.	DATE	REVISION	BY	APVD

VERIFY SCALE
BAR IS ONE INCH ON ORIGINAL DRAWING.
0 1/2" 1" 1 1/2" 2"
IF NOT ONE INCH ON THIS SHEET, ADJUST SCALES ACCORDINGLY.

Sdg Inc. CH2MHILL

City of Bloomfield, New Mexico
Water Treatment
Plant upgrade

CIVIL LEGEND AND NOTES

SHEET	4 OF 47
DWG	1-G-4
	16 JUNE, 2006
PROJ	450.3

FILENAME: PLOT DATE: PLOT TIME:

DESIGN CRITERIA:

1. APPLICABLE CODE: INTERNATIONAL BUILDING CODE, (IBC) 2003 EDITION, AS AMENDED BY THE STATE OF NEW MEXICO AND THE CITY OF BLOOMFIELD.

2. SNOW LOAD:
   GROUND SNOW LOAD 30 PSF
   IMPORTANCE FACTOR 1.1

3. WIND LOAD:
   WIND SPEED 90 MPH, 3-SEC GUST
   EXPOSURE C
   IMPORTANCE FACTOR 1.15

4. SEISMIC LOAD:

SEISMIC USE GROUP	III	(TABLE 1604.5)
IMPORTANCE FACTOR	1.25	(TABLE 1604.5)
SOIL SITE CLASS	E	(TABLE 1615.1.1)
SEISMIC DESIGN CATEGORY	A	(TABLES 1616.3 (1) & (2))

5. GEOTECHNICAL NOTES:
   A. ALLOWABLE BEARING PRESSURE: 3000 PSF
      ALLOWABLE BEARING PRESSURE CAN BE INCREASED BY ONE-THIRD FOR WIND AND SEISMIC LOADS.
   B. MINIMUM FROST DEPTH = 30"
   C. FOR FOUNDATION PREPARATION AND EARTHWORK REQUIREMENTS, SEE SPECIFICATIONS AND GEOTECHNICAL REPORT BY GEOMAT, INC., DATED APRIL 21, 2006. AND GEOTECHNICAL REPORT ADDENDUM BY GEOMAT, INC., DATED JUNE 1, 2006.

6. DATUM AND SURVEY CONTROL: SEE CIVIL DRAWINGS.

7. GROUNDWATER APPROX 22' BELOW EXISITNG GROUND SURFACE.

GENERAL:

1. FOR ABBREVIATIONS NOT LISTED, SEE "ABBREVIATIONS FOR USE ON DRAWINGS AND TEXT", PUBLISHED BY THE AMERICAN NATIONAL STANDARDS INSTITUTE INC. (ANSI).

2. VERIFY ALL OPENING DIMENSIONS IN WALLS, SLABS, AND DECKS WITH THE ARCHITECTURAL, MECHANICAL, AND ELECTRICAL DRAWINGS.

3. NO STRUCTURAL MEMBERS SHALL BE CUT FOR PIPES, DUCTS, ETC, UNLESS SPECIFICALLY DETAILED OR APPROVED IN WRITING BY THE ENGINEER.

4. VISITS TO THE JOB SITE BY THE ENGINEER TO OBSERVE THE CONSTRUCTION DO NOT IN ANY WAY MEAN THAT THEY ARE GUARANTORS OF THE CONSTRUCTOR'S WORK, NOR RESPONSIBLE FOR COMPREHENSIVE OR SPECIAL INSPECTIONS, COORDINATION, SUPERVISION, NOR SAFETY AT THE JOB SITE.

5. SPECIAL INSPECTION (OWNER APPROVED) IS REQUIRED IN ACCORDANCE WITH IBC SECTIONS 109 AND 1704 ON THE FOLLOWING PORTIONS OF THE WORK:
   CONCRETE PLACEMENT
   REINFORCING STEEL PLACEMENT
   STRUCTURAL WELDING
   HIGH-STRENGTH BOLTS
   GRADING, EXCAVATION FILLING
   ANCHORS, EMBEDS AND BOLTS INSTALLED IN CONCRETE

6. THE CONTRACTOR SHALL INFORM THE ENGINEER OF HIS SCHEDULED SPECIAL INSPECTIONS A MINIMUM OF (3) FULL WORKING DAYS PRIOR TO THE COMMENCEMENT OF SUCH WORK.

FOUNDATIONS:

1. EXCAVATE A MINIMUM 2'-0" OF EXISTING SOILS BENEATH THE BOTTOM PROPOSED ELEVATIONS OF ALL BUILDING PERIMETER FOOTINGS, FLOOR SLABS AND SUMPS. REPLACE WITH ENGINEERED FILL, COMPACTED AS REQUIRED IN SITE CIVIL SPECIFICATIONS. GRANULAR ON-SITE MATERIAL IS SUITABLE FOR USE AS THE ENGINEERED FILL. HORIZONTAL LIMITS SHALL EXTEND A MINIMUM OF 1'-0" BEYOND THE EDGE OF PERIMETER FOOTINGS. OBSERVATIONS OF THE EXCAVATION BELOW THE PROPOSED BUILDINGS SHALL BE PERFORMED BY A QUALIFIED GEOTECHNICAL ENGINEER TO DETERMINE IF OVER EXCAVATION IS REQUIRED.

2. EXCAVATIONS SHALL BE SHORED AS REQUIRED TO PREVENT SUBSIDENCE OR DAMAGE TO ADJACENT EXISTING STRUCTURES, STREETS, UTILITIES, ETC.

3. ALL FOUNDATION BEARING SURFACES SHALL BE INSPECTED BY THE GEOTECHNICAL ENGINEER PRIOR TO PLACEMENT OF FILL AND REINFORCING STEEL.

FORMWORK, SHORING AND BRACING:

1. CONSTRUCTION SHORING AND BRACING OF FORMWORK SHALL AT A MINIMUM BE IN ACCORDANCE WITH CHAPTER 4 OF ACI 301 "SPECIFICATIONS FOR STRUCTURAL CONCRETE FOR BUILDINGS" AND ACI 347 "RECOMMENDED PRACTICE FOR CONCRETE FORMWORK".

2. THE STRUCTURES SHOWN ON THE DRAWINGS HAVE BEEN DESIGNED FOR STABILITY UNDER FINAL CONDITIONS ONLY. THESE PLANS DO NOT INCLUDE THE NECESSARY COMPONENTS OR EQUIPMENT FOR THE STRUCTURE'S STABILITY DURING CONSTRUCTION. THE CONTRACTOR IS RESPONSIBLE FOR ALL WORK RELATING TO CONSTRUCTION ERECTION METHODS, BRACING, SHORING, RIGGING, GUYS, SCAFFOLDING, FORMWORK, AND OTHER WORK AIDS REQUIRED TO SAFELY PERFORM THE WORK SHOWN.

CONCRETE AND REINFORCING:

1. 28-DAY CAST-IN-PLACE CONCRETE STRENGTHS:

TYPICAL FOUNDATION SLABS & FOOTINGS	4000 PSI
CURBS AND SIDEWALKS	3000 PSI
PIPE ENCASEMENTS	3000 PSI

2. CLEARANCE FOR REINFORCEMENT BARS, UNLESS SHOWN OTHERWISE, SHALL BE 3" WHEN PLACED ON GROUND; FOR OTHER CONCRETE SURFACES 1 1/2" CLEARANCE FOR #5 BAR AND SMALLER AND 2" CLEARANCE FOR LARGER BARS.

3. ALL BENDS, UNLESS OTHERWISE SHOWN, SHALL BE A 90 DEGREE STANDARD HOOK AS DEFINED IN LATEST EDITION OF ACI 318-05.

4. UNLESS OTHERWISE NOTED, ALL WALL REINFORCEMENT BARS SHALL BE CONTINUOUS AROUND CORNERS. REINFORCEMENT SHALL BE EXTENDED INTO CONNECTING WALLS AND LAPPED ON THE OPPOSITE FACE OF THE CONNECTING WALLS, AS INDICATED ELSEWHERE ON THE GENERAL DETAILS. UNLESS INDICATED OTHERWISE, CONTRACTOR MAY SPLICE CONTINUOUS SLAB BARS AT LOCATIONS OF HIS CHOOSING, ALL REINFORCEMENT BENDS AND LAPS, UNLESS OTHERWISE NOTED, SHALL SATISFY THE FOLLOWING MINIMUM REQUIREMENT:

DETAIL OF REINFORCEMENT LAP LENGTHS

BAR SIZE		#6 OR SMALLER	#7	#8	#9	#10	#11
CONC DESIGN STRENGTH		4000 PSI					
ASTM A615, GR 60 REINF.	TOP BAR *	45 DIA. MIN 2'-0"	3'-8"	4'-9"	6'-0"	7'-8"	9'-6"
	OTHER BAR	32 DIA. MIN 1'-6"	2'-9"	3'-6"	4'-4"	5'-6"	6'-9"

* TOP BARS SHALL BE DEFINED AS ANY HORIZONTAL BARS PLACED SUCH THAT MORE THAN 12" OF FRESH CONCRETE IS CAST IN THE MEMBER BELOW THE BAR, IN ANY SINGLE POUR. HORIZONTAL WALL BARS ARE CONSIDERED TOP BARS.

5. FORM 3/4 INCH BEVELS AT ALL EXPOSED CONCRETE EDGES, UNLESS NOTED OTHERWISE.

6. COORDINATE ALL PIPE PENETRATIONS IN CONCRETE WALLS AND SLABS WITH YARD PIPING AND MECHANICAL DRAWINGS, PRIOR TO CONCRETE PLACEMENT.

7. NO ALUMINUM CONDUIT OR PRODUCTS CONTAINING ALUMINUM SHALL BE ENBEDDED IN THE CONCRETE.

8. CONSTRUCTION JOINTS INDICATED ARE IN SUGGESTED LOCATIONS. CONTRACTOR MAY REVISE LOCATIONS AFTER SUBMITTAL AND APPROVAL BY THE ENGINEER.

METAL FABRICATIONS:

1. ALL STRUCTURAL STEEL SHALL BE FABRICATED AND ERECTED IN CONFORMANCE WITH THE AISC MANUAL OF STEEL CONSTRUCTION, CURRENT EDITION.

2. ALL BOLTS SHALL BE HIGH STRENGTH BOLTS CONFORMING TO ASTM A325-N (OR A325-SC WHERE INDICATED) UNLESS OTHERWISE INDICATED. BOLTS INDICATED AS MACHINE BOLTS (MB) OR ANCHOR BOLTS (AB) SHALL CONFORM TO ASTM A307 FOR CARBON STEEL, A193 FOR STAINLESS STEEL, AND A153 FOR GALVANIZED STEEL EXCEPT WHERE SPECIFICALLY INDICATED OTHERWISE. ALL JOINT CONTACT SURFACES SHALL BE CLEAN AND FREE FROM OIL, DIRT, PAINT OR RUST.

3. ALL WELDS SHALL BE DONE BY AWS CERTIFIED WELDERS AND SHALL CONFORM TO AWS D 1.1. LATEST EDITION. ALL BUTT WELDS ARE FULL PENETRATION UNLESS INDICATED OTHERWISE. WELD FILLER METAL SHALL BE AWS A5.1 OR A5.5 E70XX ELECTRODES.

4. ALL WELDS FOUND DEFECTIVE SHALL BE REPAIRED AND/OR REPLACED AND RETESTED FOR ADEQUACY AT THE CONTRACTOR'S EXPENSE.

5. AT ALL FIELD WELDS, AT EMBED PLATES, AND ANGLES, LOW HEAT AND INTERMITTENT WELDS SHALL BE UTILIZED TO AVOID SPALLING OR CRACKING THE EXISTING CONCRETE.

6. ALL STRUCTURAL STEEL TO BE EMBEDDED IN CONCRETE SHALL BE CLEAN AND FREE OF PAINT, OIL, DIRT OR RUST.

7. NO HOLES OTHER THAN THOSE SPECIFICALLY DETAILED SHALL BE ALLOWED THROUGH STRUCTURAL STEEL MEMBERS. NO CUTTING OR BURNING OF STRUCTURAL STEEL WILL BE PERMITTED WITHOUT THE APPROVAL OF THE ENGINEER.

METAL BUILDING NOTES:

1. THE BUILDING SHELL WILL UTILIZE A PRE-ENGINEERED METAL STRUCTURE. REFER TO SPECIFICATION SECTION 13122, "METAL BUILDING SYSTEMS"

2. PER SPECIFICATIONS, COMPLETE STAMPED SHOP DRAWINGS AND STRUCTURAL CALCULATIONS FOR THE METAL BUILDING ARE TO BE SUBMITTED BY THE CONTRACTOR. CALCULATIONS ARE TO BE STAMPED BY A CIVIL OR STRUCTURAL ENGINEER REGISTERED IN THE STATE OF NEW MEXICO. ALL CALCULATIONS SHALL BE IN ACCORDANCE WITH THE 2003 INTERNATIONAL BUILDING CODE AND LOADING AS NOTED IN DESIGN CRITERIA ON THIS DRAWING.

3. CONTRACTOR SHALL VERIFY FOUNDATION PILASTER SIZES SHOWN ARE ADEQUATE FOR COLUMN BASE PLATES, AND METAL BUILDING IS COORDINATED WITH FOUNDATION.

4. ALL BUILDING COMPONENTS, INCLUDING RIGID FRAMES, ROOF PURLINS, GIRTS, FRAME BASE ANCHORAGE, ROOFING, AND SIDING SHALL BE DESIGNED AND PROVIDED BY MANUFACTURER.

5. COORDINATE LOCATION OF EQUIPMENT AND PIPING WITH MECHANICAL AND ELECTRICAL DRAWINGS.

6. CONTRACTOR SHALL VERIFY LOCATION OF EXISTING UNDERGROUND UTILITIES PRIOR TO ANY WORK.

7. BUILDING MANUFACTURER SHALL PROVIDE ADDITIONAL FRAMING AND MODIFY BUILDING FRAMING AS REQUIRED, TO ACCOMMODATE ROOF OPENINGS. ADJUST LOCATION OF OPENINGS SLIGHTLY AS REQUIRED TO AVOID CONFLICT WITH FRAMING.

CONSTRUCTION NOTES:

1. IT IS THE CONTRACTOR'S RESPONSIBILITY TO DIVERT OR REMOVE ANY SURFACE RUNOFF OR GROUNDWATER THAT MAY BE ENCOUNTERED DURING CONSTRUCTION.

2. ALL EQUIPMENT AND STOCKPILES SHOULD BE STORED AT A DISTANCE FROM THE EDGE OF EXCAVATION EQUAL TO AT LEAST THE DEPTH OF THE EXCAVATION.

3. CONTRACTOR SHALL VERIFY ALL EXISTING MATERIALS, DIMENSIONS AND LOCATIONS AT THE EXISTING FACILITIES PRIOR TO COMMENCING WORK. CONTRACTOR SHALL TAKE ALL PRECAUTIONARY MEASURES NEEDED TO PROTECT EXISTING FACILITIES.

4. PRIOR TO ANY WORK, THE CONTRACTOR SHALL VERIFY ALL EXISTING CONDITIONS, INCLUDING FACILITIES TO BE REMOVED AND FACILITIES TO BE MODIFIED AND/OR INTERGRATED WITH NEW WORK. OWNER SHALL BE NOTIFIED OF ANY DISCREPANCY BETWEEN EXISTING CONDITIONS AND THE DRAWINGS.

5. ALL DIMENSIONS AND ELEVATIONS SHALL BE FIELD VERIFIED. CONTRACTOR SHALL SUBMIT ALL REVISIONS TO THESE DRAWINGS FOR OWNER'S REVIEW AND APPROVAL.

RECORD DRAWINGS

Revisions Drawn by EJA Date 11/2007

THESE RECORD DRAWINGS HAVE BEEN PREPARED, IN PART, ON THE BASIS OF INFORMATION COMPILED BY OTHERS. THEY ARE NOT INTENDED TO REPRESENT IN DETAIL THE EXACT LOCATION, TYPE OF COMPONENT NOR MANNER OF CONSTRUCTION. THE ENGINEER WILL NOT BE RESPONSIBLE FOR ANY ERRORS OR OMISSIONS WHICH HAVE BEEN INCORPORATED INTO THE RECORD DRAWINGS.

THESE DRAWINGS WERE MODIFIED USING AUTOCAD AND REPLOTTED FOR RECORD PURPOSES AND THEREFORE DO NOT HAVE THE ENGINEER'S STAMP OR OTHER SIGNATURES THAT APPEAR ON THE ORIGINAL CONTRACT DRAWINGS.

DSGN	T. PAIGE
DR	E. ARMIJO
CHK	M. NANNINGA
APVD	M. NANNINGA

NO.	DATE	REVISION	BY	APVD

VERIFY SCALE
BAR IS ONE INCH ON ORIGINAL DRAWING. 0 1"
IF NOT ONE INCH ON THIS SHEET, ADJUST SCALES ACCORDINGLY.

Sdg Inc. CH2MHILL

BLOOMFIELD, NEW MEXICO
WATER TREATMENT PLANT
UPGRADE

STRUCTURAL
GENERAL STRUCTURAL NOTES

SHEET	5 OF 47
DWG	1-G-5
DATE	MAY 2006
PROJ	342630

FILENAME: 01_1G5D_342630.DGN PLOT DATE: 02-MAY-2006 PLOT TIME: 00:00:00

© CH2M HILL
THIS DOCUMENT, AND THE IDEAS AND DESIGNS INCORPORATED HEREIN, AS AN INSTRUMENT OF PROFESSIONAL SERVICE, IS THE PROPERTY OF CH2M HILL AND IS NOT TO BE USED, IN WHOLE OR IN PART, FOR ANY OTHER PROJECT WITHOUT THE WRITTEN AUTHORIZATION OF CH2M HILL.
REUSE OF DOCUMENTS:

PIPE AND FITTING SYMBOLS

DOUBLE LINE	SINGLE LINE	
		EXISTING PIPE
		NEW PIPE
		EXISTING PIPE TO BE ABANDONED
		EXISTING PIPE TO BE REMOVED
		WELDED JOINT
		GROOVED END JOINT
		FLANGED JOINT
		MECHANICAL JOINT
		BELL & SPIGOT JOINT (LEADED)
		HUB & SPIGOT JOINT (RUBBER GASKET)
		BALL JOINT
		ADAPTER SIDE GROOVED END ADAPTER FLANGE
		FLANGED COUPLING ADAPTER
		FLEXIBLE COUPLING
		METAL BELLOWS EXP JOINT
		ELASTOMER BELLOWS EXP JOINT
		ELBOW UP
		ELBOW DOWN
		TEE UP
		TEE DOWN
		LATERAL UP
		LATERAL DOWN
		CONCENTRIC REDUCER
		ECCENTRIC REDUCER
		REDUCING BUSHING
		UNION

DOUBLE LINE	SINGLE LINE	
		CAP
		ANCHOR
		ELBOW, 90 DEGREE
		CROSS
		TEE
		ELBOW, 45 DEGREE
		LATERAL

NOTES:

1. ONLY FLANGED END CONNECTIONS ARE SHOWN HERE FOR DOUBLE LINE FITTINGS. FITTINGS WITH OTHER END PATTERNS ARE SHOWN SIMILARLY ON THE CONSTRUCTION DRAWINGS. ALSO SEE PIPING SPECIFICATIONS.
2. SYMBOLS SHOWN HERE FOR SINGLE LINE FITTINGS ARE GENERIC ONLY. REFER TO PIPING SPECIFICATIONS FOR SPECIFIC END CONNECTIONS FOR SINGLE LINE PIPE AND FITTINGS.
3. PROVIDE THRUST RESTRAINT FOR ALL FLEXIBLE COUPLINGS, FCA'S, ETC. AS SPECIFIED.
4. PROVIDE CONTROL RODS FOR ALL BELLOWS EXPANSION JOINTS AND COUPLINGS AS SPECIFIED.

MISCELLANEOUS PIPING SYMBOLS

- STRAINER
- SIGHT GLASS
- FLEXIBLE (ELASTOMER) PIPE CONNECTION
- GAUGE WITH COCK
- THERMOMETER
- ROTAMETER
- PIG LAUNCHER
- PIG CATCHER
- BACKFLOW PREVENTER
- REDUCER
- FLEXIBLE HOSE
- FLEXIBLE CONNECTOR
- PS 26-1-2 — TYPICAL INSTRUMENT SYMBOL (SEE I&C LEGEND)

VALVE SYMBOLS

- GATE
- K — KNIFE GATE
- BUTTERFLY
- GLOBE
- BALL
- V — VEE-BALL
- SEATING PORT
- ECCENTRIC PLUG
- PLUG OR COCK
- NEEDLE
- DIAPHRAGM
- PINCH
- SWING CHECK
- BALL CHECK
- HOSE VALVE (HV- X) OR (V-X) X = NO. IN SPECS
- S — SAMPLE
- MUD
- PRESSURE RELIEF
- AIR AND/OR VACUUM RELEASE
- REGULATED SIDE — PRESSURE CONTROL
- REGULATED SIDE — PRESSURE REGULATOR
- MULTI-PORT VALVE, ARROWS INDICATE FLOW PATTERN. SEATING PORTS ARE IMPLIED BY INDICATED FLOW PATTERN.
- TELESCOPING
- ROTARY
- ANGLE

ACTUATOR SYMBOLS

- PNEUMATIC DIAPHRAGM SPRING-OPPOSED, SINGLE OR DOUBLE ACTING
- PNEUMATIC CYLINDER SINGLE OR DOUBLE ACTING ACTUATED BY ONE INPUT
- E OR M — ELECTRIC MOTOR
- H — HYDRAULIC
- MANUAL
- S — SOLENOID
- E/H — ELECTRO HYDRAULIC

VALVE DESIGNATIONS

MANUAL VALVES AND CHECK VALVES

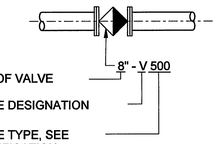

CONTROL VALVES

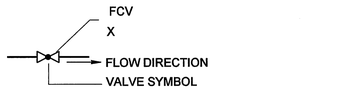

* BUBBLE WITH FUNCTION AND THE TAG NUMBER DESIGNATION (SEE I&C LEGEND FOR TAGGING INSTRUMENT IDENTIFICATION)

PIPING DESIGNATION

EXAMPLE:

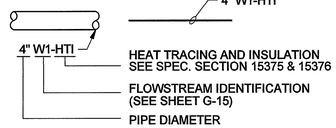

PIPE AND FITTING END PATTERNS

B	BELL	PE	PLAIN END
S	SPIGOT	GE	GROOVED END
F	FLANGE	MJ	MECHANICAL JOINT

EXAMPLE:

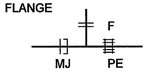

RECORD DRAWINGS

Revisions Drawn by EJA Date 11/2007

THESE RECORD DRAWINGS HAVE BEEN PREPARED, IN PART, ON THE BASIS OF INFORMATION COMPILED BY OTHERS. THEY ARE NOT INTENDED TO REPRESENT IN DETAIL THE EXACT LOCATION, TYPE OF COMPONENT NOR MANNER OF CONSTRUCTION. THE ENGINEER WILL NOT BE RESPONSIBLE FOR ANY ERRORS OR OMISSIONS WHICH HAVE BEEN INCORPORATED INTO THE RECORD DRAWINGS.

THESE DRAWINGS WERE MODIFIED USING AUTOCAD AND REPLOTTED FOR RECORD PURPOSES AND THEREFORE DO NOT HAVE THE ENGINEER'S STAMP OR OTHER SIGNATURES THAT APPEAR ON THE ORIGINAL CONTRACT DRAWINGS.

DSGN	A. FRIEDT
DR	E. ARMIJO
CHK	M. BREWER
APVD	M. BREWER

NO.	DATE	REVISION	BY	APVD

VERIFY SCALE
BAR IS ONE INCH ON ORIGINAL DRAWING. 0 — 1"
IF NOT ONE INCH ON THIS SHEET, ADJUST SCALES ACCORDINGLY.

Sdg Inc. CH2MHILL

BLOOMFIELD, NEW MEXICO
WATER TREATMENT PLANT
UPGRADE

GENERAL
MECHANICAL
LEGEND
SHEET 1 OF 2

SHEET	6 OF 47
DWG	1-G-6
DATE	05-05-2006
PROJ	342630

FILENAME: 01_1G6D_342630 PLOT DATE: MAY 2005 PLOT TIME: 00:00:00

THIS DOCUMENT, AND THE IDEAS AND DESIGNS INCORPORATED HEREIN, AS AN INSTRUMENT OF PROFESSIONAL SERVICE, IS THE PROPERTY OF CH2M HILL AND IS NOT TO BE USED, IN WHOLE OR IN PART, FOR ANY OTHER PROJECT WITHOUT THE WRITTEN AUTHORIZATION OF CH2MHILL.

© CH2M HILL

REUSE OF DOCUMENTS:

MECHANICAL LEGEND AND NOTES

GENERAL PIPING NOTES

1. UNDERGROUND UTILITIES SHOWN ARE TAKEN FROM EXISTING RECORDS AND ARE SHOWN FOR THE CONVENIENCE OF THE CONTRACTOR ONLY. THE CONTRACTOR SHALL CONTACT ALL UTILITY OWNERS AND CONFIRM LOCATIONS OF UTILITIES AT LEAST 48 HOURS BEFORE BEGINNING CONSTRUCTION. THE CONTRACTOR SHALL ACCURATELY LOCATE AND UNCOVER ALL EXISTING UTILITIES BEFORE BEGINNING CONSTRUCTION. ANY DAMAGE RESULTING FROM THE CONTRACTOR'S OPERATIONS SHALL BE REPAIRED AT THE CONTRACTOR'S EXPENSE. WHERE CROSSING OF EXISTING UTILITIES OCCUR, PROVIDE 12" MINIMUM CLEARANCE EXCEPT WATER MAINS SHALL BE 18". CROSS UNDER ALL WATER MAINS WHERE NOT POSSIBLE TO PROVIDE 16" CLEARANCE.
2. SEWER AND WATER SERVICE SHALL BE MAINTAINED DURING ENTIRE CONSTRUCTION PERIOD OR TEMPORARY FACILITIES PROVIDED.
3. MINIMUM COVER OVER PIPING SHALL BE 3'-0", BELOW FINISHED GRADE.
4. PROVIDE MINIMUM PIPE COVER, AS SPECIFIED. IN GENERAL LAY PIPE TO UNIFORM GRADES BETWEEN THE ELEVATIONS SHOWN, UNLESS OTHERWISE APPROVED. IN SOME CASES, EXISTING CONDITIONS PROHIBIT UNIFORM GRADES BETWEEN THE ELEVATIONS SHOWN, AND FIELD ADJUSTMENTS TO UNIFORM GRADES ARE REQUIRED AS APPROVED.
5. SIZE OF FITTINGS SHOWN ON PLANS SHALL CORRESPOND TO ADJACENT STRAIGHT RUN OF PIPE, UNLESS OTHERWISE INDICATED. TYPE OF JOINT AND FITTING MATERIAL SHALL BE THE SAME AS SHOWN FOR ADJACENT STRAIGHT RUN OF PIPE.
6. LOCATION AND NUMBER OF PIPE HANGERS AND PIPE SUPPORTS SHOWN IS ONLY APPROXIMATE. CONTRACTOR SHALL DESIGN SUPPORTS AS SPECIFIED.
7. ALL JOINTS SHALL BE WATERTIGHT. WALL PIPES SHALL BE USED WHEREVER PIPING PASSES FROM A STRUCTURE TO BACKFILL.
8. ALL FLEXIBLE CONNECTORS AND FLANGED COUPLING ADAPTERS SHALL BE PROVIDED WITH THRUST TIES, BLOCKS, AND ANCHORS, UNLESS OTHERWISE NOTED. THRUST PROTECTION SHALL BE ADEQUATE FOR TEST PRESSURES SPECIFIED.
9. SYMBOLS, LEGENDS, AND PIPE USE IDENTIFICATIONS SHOWN SHALL BE FOLLOWED THROUGHOUT THE PLANS, WHEREVER APPLICABLE. NOT ALL OF THE VARIOUS PIPING COMPONENTS ARE NECESSARILY USED IN THE PROJECT.
10. ALL BURIED PIPING SPECIFIED TO BE PRESSURE TESTED, EXCEPT FLANGED, WELDED, OR SCREWED PIPING, SHALL BE PROVIDED WITH THRUST RESTRAINT. THRUST RESTRAINT FOR NEW PIPING SHALL BE AS SPECIFIED IN SECTION 15200. THRUST RESTRAINT FOR EXISTING PIPING SHALL BE BY CONCRETE THRUST BLOCKS AT ALL DIRECTION CHANGES, UNLESS OTHERWISE NOTED. SEE THRUST RESTRAINT DETAILS AND NOTES ON THIS SHEET.
11. NUMBER AND LOCATION OF UNIONS SHOWN ON PLANS IS ONLY APPROXIMATE. PROVIDE ALL UNIONS NECESSARY IN THE OPINION OF THE ENGINEER TO FACILITATE CONVENIENT REMOVAL OF VALVES AND MECHANICAL EQUIPMENT.
12. WHERE A GROOVED END COUPLING IS SHOWN, IT SHALL BE THE RIGID JOINT TYPE, UNLESS OTHERWISE SPECIFIED. WHERE A FLANGED COUPLING ADAPTER IS SHOWN, A STANDARD FLANGE SHALL BE JOINED TO THE COUPLING ADAPTER.

NOTE:
FLOW STREAM IDENTIFICATIONS ARE SHOWN ON INSTRUMENTATION AND CONTROL LEGEND (SHEET G-15)

YARD PIPING LEGEND

DOUBLE LINE	SINGLE LINE	
		EXISTING PIPE
		NEW PIPE
		EXISTING PIPE TO BE ABANDONED
		EXISTING PIPE TO BE REMOVED
NEW	EXISTING	
		NON-FREEZE HOSE VALVE (V-X) X = NO. IN SPECIFICATIONS
		NON-FREEZE HOSE VALVE WITH HOSE RACK (V-X) X = NO. IN SPECIFICATIONS
		GATE VALVE
		BUTTERFLY VALVE
FLOW SEATING PORT		ECCENTRIC PLUG VALVE
		INDICATOR POST VALVE
		FIRE HYDRANT
		CATHODIC PROTECTION TEST STATION
		CATHODIC PROTECTION ANODE

THRUST BLOCK NOTES AND DETAILS

THRUST BLOCK NOTES

1. KEEP CONCRETE CLEAR OF JOINT AND JOINT ACCESSORIES.
2. CONCRETE THRUST BLOCKING SHALL BE POURED AGAINST UNDISTURBED EARTH.
3. REQUIRED VOLUMES OR BEARING AREAS AT FITTINGS SHALL BE AS INDICATED BELOW, ADJUSTED, IF NECESSARY, TO CONFORM TO THE TEST PRESSURE(S) AND ALLOWABLE SOIL BEARING STRESS(ES) STATED IN THE SPECIFICATIONS.
4. THRUST BLOCK VOLUMES FOR VERTICAL BENDS HAVING UPWARD RESULTANT THRUSTS ARE BASED ON TEST PRESSURE OF 150 PSIG AND THE WEIGHT OF CONCRETE = 4050 LBS/CU YD. TO COMPUTE VOLUMES FOR DIFFERENT TEST PRESSURES, USE THE FOLLOWING EQUATION: VOLUME = (TEST PRESS./150) x (TABLE VALUE).
5. BEARING AREAS FOR HORIZONTAL BEND THRUST BLOCKS ARE BASED ON TEST PRESSURE OF 150 PSIG AND AN ALLOWABLE SOIL BEARING STRESS OF 2000 LBS/SQ FT. TO COMPUTE BEARING AREAS FOR DIFFERENT TEST PRESSURES AND SOIL BEARING STRESSES, MULTIPLY TABLE VALUES BY THE FACTOR $(13.33)(P'/S'_b)$, WHERE: P' = ACTUAL TEST PRESSURE, PSIG; S'_b = ACTUAL SOIL BEARING PRESSURE, PSF.
6. THRUST BLOCKS FOR VERTICAL BENDS HAVING DOWNWARD RESULTANT THRUSTS SHALL BE THE SAME AS FOR HORIZONTAL BENDS.
7. BEARING AREAS, VOLUMES, AND SPECIAL BLOCKING DETAILS SHOWN ON PLANS TAKE PRECEDENCE OVER THIS STANDARD
8. BEARING AREA OF THRUST BLOCK SHALL NOT BE LESS THAN 1.0 SQ FT.
9. VERTICAL BENDS THAT REQUIRE A THRUST BLOCK VOLUME EXCEEDING 5 CUBIC YARDS REQUIRE SPECIAL BLOCKING DETAILS. SEE PLANS FOR VOLUMES SHOWN TO LEFT OF SOLID LINE IN TABLE.
10. TEST PRESSURES ARE SHOWN IN THE PIPING SCHEDULE.
11. ALLOWABLE SOIL BEARING STRESS IS 2000 LBS/SQ FT.

BEARING AREA OF THRUST BLOCKS IN SQ. FT. (HORIZONTAL BENDS)

FITTING SIZE	TEE, WYE, PLUG, OR CAP	90° BEND PLUGGED CROSS	TEE PLUGGED RUN		BEND ANGLE		
			A_1	A_2	45°	22 1/2°	11 1/4°
10	5.9	8.4	11.8	8.4	4.6	2.4	1.2
12	8.5	12.0	17.0	12.0	6.6	3.4	1.7

VOLUME OF THRUST BLOCK IN CUBIC YARDS (VERTICAL BENDS)

FITTING SIZE	BEND ANGLE		
	45°	22 1/2°	11 1/4°
10	6.0	2.3	0.9
12	8.5	3.2	1.3

FITTING SIZE	ROD SIZE	EMBEDMENT
12" AND LESS	#6	30"

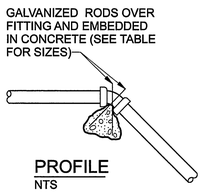

PROFILE
NTS

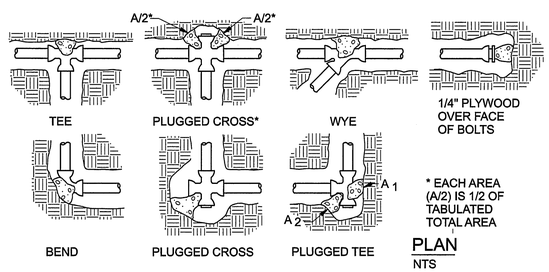

PLAN
NTS

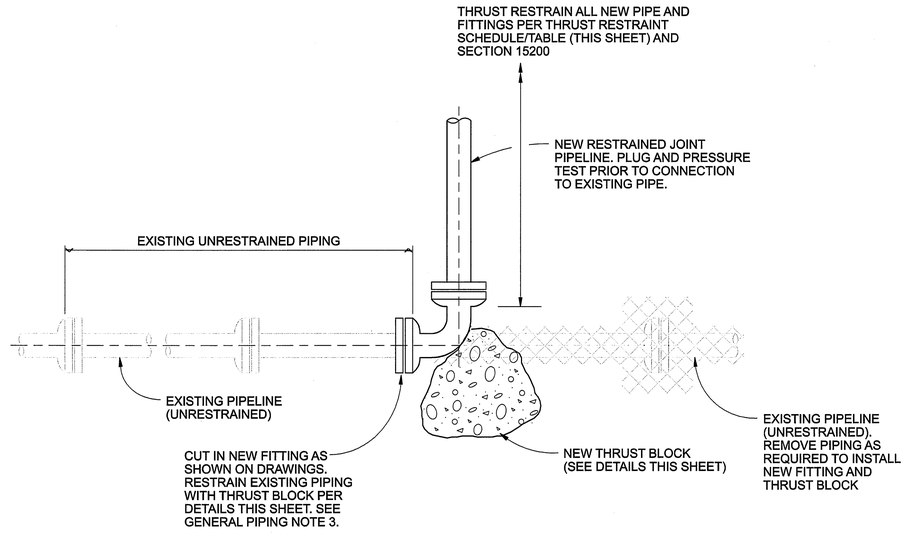

CONNECTION TO EXISTING BURIED PIPELINES

NTS

NOTES:

1. FOR IN-LINE IN CUT CONNECTIONS, USE LONG BODY CEMENT LINED DUCTILE IRON SOLID SLEEVE WITH MEGA LUG SERIES 1100 FOLLOWER GLANDS, OR EQUAL.

THRUST RESTRAINT SCHEDULE/TABLE

MINIMUM RESTRAINED LENGTH (FT) FOR A TEST PRESSURE OF 100 PSI

NOMINAL PIPE SIZE (INCHES)	FITTING TYPE				
	TEE, BRANCH, OR 90 DEGREE	WYE OR 45 DEGREE	22 1/2° DEGREE	11 1/4° DEGREE	TERMINAL PLUG
4 & 6	18	18	18	18	30
8	18	18	18	18	39
10	18	18	18	18	47
12	18	18	18	18	54
14	18	29	18	18	62
16	24	37	18	18	69
18	33	45	18	18	76
20	41	53	24	18	83

THRUST RESTRAINT SCHEDULE/TABLE NOTES

1. JOINT RESTRAINT FOR NEW DUCTILE IRON PIPING AND CARBON STEEL PIPING AS SPECIFIED IN SECTION 15200 AND PIPING SECTIONS. TABULATED VALUES FOR 100 PSI TEST PRESSURE. FOR VALUES AT PRESSURES OTHER THAN 100 PSI, MULTIPLY TABLE VALUES BY THE RATIO OF ACTUAL TEST PRESSURE TO 100. TEST PRESSURES FOR EACH SERVICE ARE DEFINED IN THE PIPING SCHEDULE (SECTION 15200).
2. WHERE LISTED VALUES ARE LESS THAN ONE PIPE SEGMENT, RESTRAIN THE FITTING JOINTS ONLY.
3. RESTRAINED LENGTHS APPLY TO PIPE RUNS ON EACH SIDE OF A CHANGE IN DIRECTION.
4. THRUST RESTRAINT TABLE REFERS TO NEW PIPING.

RECORD DRAWINGS
Revisions Drawn by EJA Date 11/2007

THESE RECORD DRAWINGS HAVE BEEN PREPARED, IN PART, ON THE BASIS OF INFORMATION COMPILED BY OTHERS. THEY ARE NOT INTENDED TO REPRESENT IN DETAIL THE EXACT LOCATION, TYPE OF COMPONENT NOR MANNER OF CONSTRUCTION. THE ENGINEER WILL NOT BE RESPONSIBLE FOR ANY ERRORS OR OMISSIONS WHICH HAVE BEEN INCORPORATED INTO THE RECORD DRAWINGS.

© CH2M HILL

THIS DOCUMENT, AND THE IDEAS AND DESIGNS INCORPORATED HEREIN, AS AN INSTRUMENT OF PROFESSIONAL SERVICE, IS THE PROPERTY OF CH2M HILL AND IS NOT TO BE USED, IN WHOLE OR IN PART, FOR ANY OTHER PROJECT WITHOUT THE WRITTEN AUTHORIZATION OF CH2MHILL.

REUSE OF DOCUMENTS:

THESE DRAWINGS WERE MODIFIED USING AUTOCAD AND REPLOTTED FOR RECORD PURPOSES AND THEREFORE DO NOT HAVE THE ENGINEER'S STAMP OR OTHER SIGNATURES THAT APPEAR ON THE ORIGINAL CONTRACT DRAWINGS.

DSGN	A. FRIEDT
DR	E. ARMIJO
CHK	M. BREWER
APVD	M. BREWER

NO.	DATE	REVISION	BY	APVD

VERIFY SCALE
BAR IS ONE INCH ON ORIGINAL DRAWING. 0 1"
IF NOT ONE INCH ON THIS SHEET, ADJUST SCALES ACCORDINGLY.

Sdg Inc. CH2MHILL

BLOOMFIELD, NEW MEXICO
WATER TREATMENT PLANT
UPGRADE

GENERAL
MECHANICAL LEGEND SHEET 2 OF 2

SHEET	7 OF 47
DWG	1-G-7
DATE	05-05-2006
PROJ	342630

FILENAME: 01_1G6D_342630.DGN PLOT DATE: 05-MAY-2006 PLOT TIME: 00:00:00

AERIAL PHOTOGRAPHY & TOPOGRAPHIC MAPPING BY THOMAS R. MANN & ASSOCIATES, INC. FLIGHT DATE: AUG. 20, 2003

WARNING

If any utility lines, pipelines, or underground utility lines are shown on these Drawings, they are shown in an approximate manner only, and lines may exist where none are shown. If any such existing lines are shown, the location is based upon information by the utility or pipeline company company, the owner, or by others, and the information may be incomplete, or may be obsolete by the time construction commences.

The Engineer has undertaken no field verification of the location, depth, size, or type of existing utilities, pipelines, or underground utility lines, makes no representation thereto, and assumes no responsibility or liability therefor. The Contractor shall inform itself of the location of any utility line, pipeline, or underground utility line in or near the area of the work in advance of and during excavation work. The Contractor is fully responsible for any and all damage caused by its failure to locate, identify, and preserve any and all existing utilities, pipelines and underground utility lines. The Contractor is urged to comply with state statutes, municipal and local ordinances, rules and regulations, if any, pertaining to the location of these lines, in planning and conducting excavation.

RECORD DRAWINGS
THESE RECORD DRAWINGS HAVE BEEN PREPARED ON THE BASIS OF INFORMATION COMPILED AND FURNISHED BY CONTRACTOR AND OTHERS. THE ENGINEER WILL NOT BE RESPONSIBLE FOR ANY ERRORS OR OMISSIONS WHICH HAVE BEEN INCORPORATED INTO THIS DOCUMENT AS A RESULT.
DATE: 11/16/07

WALTER L. WILLIAMS NEW MEXICO 9080 REGISTERED PROFESSIONAL ENGINEER

		NO.	DATE	REVISION	BY	APVD
DSGN	WLW					
DR	MAS					
CHK	JMS					
APVD	Approved_By					

VERIFY SCALE
BAR IS ONE INCH ON ORIGINAL DRAWING.
0 1/2" 1"
IF NOT ONE INCH ON THIS SHEET, ADJUST SCALES ACCORDINGLY.

Sdg Inc. | CH2MHILL

City of Bloomfield, New Mexico
Water Treatment
Plant Upgrade

EXISTING SITE UTILITY PLAN

SHEET	8 OF 47
DWG	5-C-1
DATE	9 JUNE, 2006
PROJ	450.3

FILENAME: BLOOMFIELD WTP PLOT DATE: PLOT TIME:

© SULLIVAN DESIGN GROUP, INC.
THIS DOCUMENT, AND THE IDEAS AND DESIGNS INCORPORATED HEREIN, AS AN INSTRUMENT OF PROFESSIONAL SERVICE, IS THE PROPERTY OF SULLIVAN DESIGN GROUP, INC. AND IS NOT TO BE USED, IN WHOLE OR IN PART, FOR ANY OTHER PROJECT WITHOUT THE WRITTEN AUTHORIZATION OF SULLIVAN DESIGN GROUP, INC.
REUSE OF DOCUMENTS:

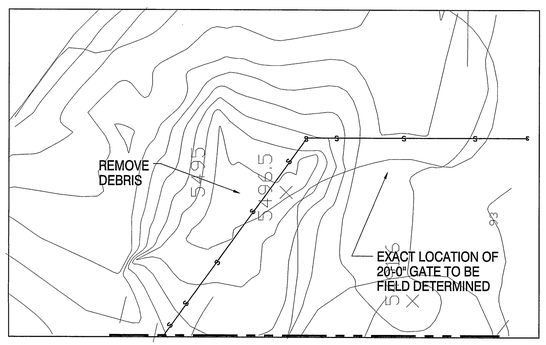

AERIAL PHOTOGRAPHY & TOPOGRAPHIC MAPPING BY THOMAS R. MANN & ASSOCIATES, INC. FLIGHT DATE: AUG. 20, 2003

WARNING

If any utility lines, pipelines, or underground utility lines are shown on these Drawings, they are shown in an approximate manner only, and lines may exist where none are shown. If any such existing lines are shown, the location is based upon information by the utility or pipeline company company, the owner, or by others, and the information may be incomplete, or may be obsolete by the time construction commences.

The Engineer has undertaken no field verification of the location, depth, size, or type of existing utilities, pipelines, or underground utility lines, makes no representation thereto, and assumes no responsibility or liability therefor. The Contractor shall inform itself of the location of any utility line, pipeline, or underground utility line in or near the area of the work in advance of and during excavation work. The Contractor is fully responsible for any and all damage caused by its failure to locate, identify, and preserve any and all existing utilities, pipelines and underground utility lines. The Contractor is urged to comply with state statutes, municipal and local ordinances, rules and regulations, if any, pertaining to the location of these lines, in planning and conducting excavation.

IRRIGATION NOTES:

1. REPLACE CONTROLLER VALVES & HEADER PIPES.
2. THE IRRIGATION SYSTEM EAST OF HEADER WILL HAVE 3 ZONE #S: 1 FOR DRIP AND 2 FOR SPRINKLERS.
3. THE IRRIGATION SYSTEM WEST OF THE HEADER WILL HAVE 3 ZONE #S: 1 FOR FUTURE AND 2 FOR SPRINKLERS.
4. ALL IRRIGATION PIPES SHALL BE SCHEDULE 40.
5. ALL IRRIGATION PIPING UNDER ASPHALT SHALL BE 30" DEEP. ALL OTHER IRRIGATION PIPING SHALL BE 18" DEEP.
6. THE CONTRACTOR USED 3/4" PVC, 1" PVC, 1-1/4" PVC, 1-1/2" PVC, AND 2" PVC WHEN INSTALLING THE NEW IRRIGATION SYSTEM. EXACT LOCATIONS WERE NOT VERIFIED BY CONTRACTOR.

MATCH LINE A-A

ARROYO

EXISTING SHOP ON SKIDS, TO BE RELOCATED.

26'-17"Sx 13"R CMP

REMOVE THIS SECTION OF FENCE & C&G

EXISTING CHECK VALVE

CMP CULVERT WAS EXTENDED ±15'-0"

INSTALL A CATCH BASIN THE COSTS SHALL BE INCIDENTAL TO CONC. CURB & GUTTER. (SEE SHT. 5-C-6 FOR DETAILS)

18" RAW WATER

SAS

START CURB AND GUTTER

NEW SOD

REPORTED TO BE 8" INSIDE OLD 12" WATER CASING

INSTALL TWO BOLLARDS IN FRONT OF EACH PIPE. LOCATE BOLLARDS 2'-0" BEHIND THE CURB AND SPACE THEM 8'-0" APART. THE COST OF THE BOLLARDS SHALL BE INCIDENTAL TO CONC. CURB & GUTTER (SEE SHT. 5-C-5 FOR DETAILS).

START VALLEY GUTTER

END VALLEY GUTTER

GRAVEL BASE COURSE

12" PVC

4" EFFLUENT

12" SAS

2" GAS

INV.=92.24S 92.34NW

RIM=96.67 INV.=92.39

INV.=96.20(S) INV.=96.10(N)

INV.=95.750(S) INV.=96.65(NW)

16" D.I.P.

NEW TREATMENT PLANT BUILDING (75' X 60') FF = 5499.50

15'-0"

NEW CONTROLLER, VALVES, & HEADER FOR IRRIGATION.

ZONE #1=ROTOR
ZONE #2=ROTOR
ZONE #3=ROTOR
ZONE #4=STUBOUT
ZONE #5=DRIP
ZONE #6=SPARE

THIS SYMBOL DENOTES CRUSHER FINES.

NEW S.W

PARKING SPACES

3-2" PVC SLEEVES

REMOVE CONC. CURB & GUTTER

EDGE OF NEW SOD

NEW SOD

1" PVC PIPE FOR DRIP SYSTEM

PVC PIPE FOR SPRINKLERS

LANDSCAPE ROCK (CRUSHER FINES)

RAILING

EAST BLANCO BLVD,

8" AC/ GR CLAY

CP 114 BENCHMARK EL=5496.6580

CP 113 BENCHMARK EL=5500.9490

TOP 5495.55(BY CITY) INV. 5492.24(BY CITY)

MH #5 SKD CMP SHOWS IN THIS MH

MH #1

MH #8

BOOSTER PUMP

EXISTING PLANTER

ZONE #5

ZONE #3

ZONE #4

ZONE #2

ZONE #1

WIRE ENCLOSED RIPRAP (SEE MISC. DETAILS)

EMERGENCY SPILLWAY FOR POND (96.50)

53'-0" OF 16" D.I.P. PIPE @0.19%

2:1 SLOPE (TYP)

8' FLAT AREA FOR DRIVING MACHINERY

12" POND DRAIN INV.=92.40

18" SUMP DRAIN INV.=95.00

EMERGENCY OVERFLOW DRAIN INLET=95.5 (SEE MISC. DETAILS)

OVERFLOW POND HIGH WATER =5495 BOTTOM = 5493.0

3:1 SLOPE (TYP)

FLAT AREA FOR DRIVING MACHINERY

EXISTING FENCE

NEW FENCE JUST AROUND POND. FENCE AROUND ENTIRE SITE WAS ELIMINATED.

SILT FENCES (WERE REMOVED AFTER PROJECT WAS COMPLETED)

APPROXIMATE LOCATION OF NEW IRRIGATION PIPING

N

0 10 20 40
SCALE IN FEET

NOTES:

1. EXACT LOCATION OF FENCE AND GATES TO BE FIELD DETERMINED.
2. EXACT LOCATION OF SOD AND LANDSCAPE ROCK SHALL BE FIELD DETERMINED.
3. SEE SHEET 4 FOR LEGEND. (2)

NOTE:
SEE SHT. 11 OF 45 FOR ANY CHANGES TO THE PIPING FOR THE WATER TREATMENT PLANT

RECORD DRAWINGS
THESE RECORD DRAWINGS HAVE BEEN PREPARED ON THE BASIS OF INFORMATION COMPILED AND FURNISHED BY CONTRACTOR AND OTHERS. THE ENGINEER WILL NOT BE RESPONSIBLE FOR ANY ERRORS OR OMISSIONS WHICH HAVE BEEN INCORPORATED INTO THIS DOCUMENT AS A RESULT.
DATE: 11/16/07

WALTER L. WILLIAMS NEW MEXICO 9080 REGISTERED PROFESSIONAL ENGINEER

DSGN	WLW
DR	MAS
CHK	JMS
APVD	

NO.	DATE	REVISION	BY	CHK'D	APV'D
1	6/4/07	LANDSCAPE DESIGN CHANGES	MAS	WLW	JMS
2	11/9/07	REVISED AS PER RECORD DRAWINGS	MAS	WLW	JMS

VERIFY SCALE
BAR IS ONE INCH ON ORIGINAL DRAWING.
0 1" IF NOT ONE INCH ON THIS SHEET, ADJUST SCALES ACCORDINGLY.

Sdg Inc. | CH2MHILL

City of Bloomfield, New Mexico
Water Treatment
Plant Upgrade

CIVIL SITE PLAN - REVISED

SHEET	9R OF 47
DWG	5-C-2
DATE	1 MAY, 2007
PROJ	450.3

FILENAME: PLOT DATE: PLOT TIME:

© SULLIVAN DESIGN GROUP, INC.
THIS DOCUMENT, AND THE IDEAS AND DESIGNS INCORPORATED HEREIN, AS AN INSTRUMENT OF PROFESSIONAL SERVICE, IS THE PROPERTY OF SULLIVAN DESIGN GROUP, INC. AND IS NOT TO BE USED, IN WHOLE OR IN PART, FOR ANY OTHER PROJECT WITHOUT THE WRITTEN AUTHORIZATION OF SULLIVAN DESIGN GROUP, INC.
REUSE OF DOCUMENTS:

AERIAL PHOTOGRAPHY & TOPOGRAPHIC MAPPING BY THOMAS R. MANN & ASSOCIATES, INC. FLIGHT DATE: AUG. 20, 2003

REMOVE DEAD TREES & DEAD BRUSH ON WEST SIDE OF ARROYO FROM WEST PROPERTY LINE TO E. BLANCO BLVD.

REMOVE DEBRIS

EXACT LOCATION OF 20'-0" GATE TO BE FIELD DETERMINED

MATCH LINE A-A

WARNING

If any utility lines, pipelines, or underground utility lines are shown on these Drawings, they are shown in an approximate manner only, and lines may exist where none are shown. If any such existing lines are shown, the location is based upon information by the utility or pipeline company company, the owner, or by others, and the information may be incomplete, or may be obsolete by the time construction commences.

The Engineer has undertaken no field verification of the location, depth, size, or type of existing utilities, pipelines, or underground utility lines, makes no representation thereto, and assumes no responsibility or liability therefor. The Contractor shall inform itself of the location of any utility line, pipeline, or underground utility line in or near the area of the work in advance of and during excavation work. The Contractor is fully responsible for any and all damage caused by its failure to locate, identify, and preserve any and all existing utilities, pipelines and underground utility lines. The Contractor is urged to comply with state statutes, municipal and local ordinances, rules and regulations, if any, pertaining to the location of these lines, in planning and conducting excavation.

RELOCATE SKID MOUNTED METER SHOP TO NEW ON-SITE LOCATION DESIGNATED BY OWNER AND RECONNECT POWER (INCIDENTAL TO SITE GRADING).

MATCH LINE A-A

REMOVE THIS SECTION OF FENCE, PICNIC TABLE & OLD C & G. (FENCE & TABLE REMOVAL INCIDENTAL TO SITE GRADING)

REMOVE EXISTING GENERATOR AND ENCLOSURE

EXISTING CLEARWELL BOTTOM ELEV. = 5488.35, TOP ELEV. = 5497.5

NEW TREATMENT PLANT BUILDING (75' X 60') FF = 5499.50

INSTALL 3' STEEL PLATE (3'-0" HIGH) ON THE OUTSIDE OF THE BLDG. TO PROTECT THE EXISTING METAL SIDING. BOLT THE STEEL PLATE TO THE COLUMNS ON THE INSIDE OF THE BLDG.

EMERGENCY SPILLWAY FOR POND (96.50)

WIRE ENCLOSED RIPRAP (SEE MISC. DETAILS)

53'-0" OF 16" D.I.P. PIPE @0.19% (CLASS 350)

12" POND DRAIN INV.=92.40

18" SUMP DRAIN INV.=95.00

EMERGENCY OVERFLOW DRAIN INLET=95.5 (SEE MISC. DETAILS)

OVERFLOW POND HIGH WATER =5495 BOTTOM = 5493.0

"V"-TRENCHES TO ANCHOR LINER PIPE (SEE SHT. 5-C-5 FOR DETAILS)

FLAT AREA FOR DRIVING MACHINERY

2:1 SLOPE (TYP)

3:1 SLOPE (TYP)

8' FLAT AREA FOR DRIVING MACHINERY

REMOVE DEAD TREES & DEAD BRUSH ON WEST SIDE OF ARROYO FROM WEST PROPERTY LINE TO E. BLANCO BLVD.

NOTES:

1. EXACT LOCATION OF FENCE AND GATES TO BE FIELD DETERMINED. CONTRACTOR SHALL FLAG PROPOSED FENCE LOCATION.
2. THE 8" OF AGGREGATE BASE SHALL BE CONSTRUCTED IN TWO LIFTS.
3. THE 4" OF PLANT MIX BITUMINOUS PAVEMENT SHALL BE CONSTRUCTED IN TWO LIFTS.
4. THE EXISTING GENERATOR SHALL REMAIN IN PLACE UNTIL NEW SYSTEM AND NEW GENERATOR ARE OPERATIONAL, THEN CONTRACTOR SHALL REMOVE THE EXISTING GENERATOR AND ENCLOSURE. HE SHALL STORE THE GENERATOR ON AN ON-SITE LOCATION CHOSEN BY THE OWNER
5. CONTRACTOR SHALL FIELD INSTALL SMOOTH TRANSITIONS BETWEEN THE GRADE CHANGES.

EAST BLANCO BLVD.

REPORTED TO BE 8" INSIDE OLD 12" WATER CASING

© SULLIVAN DESIGN GROUP, INC.

THIS DOCUMENT, AND THE IDEAS AND DESIGNS INCORPORATED HEREIN, AS AN INSTRUMENT OF PROFESSIONAL SERVICE, IS THE PROPERTY OF SULLIVAN DESIGN GROUP, INC. AND IS NOT TO BE USED, IN WHOLE OR IN PART, FOR ANY OTHER PROJECT WITHOUT THE WRITTEN AUTHORIZATION OF SULLIVAN DESIGN GROUP, INC.

REUSE OF DOCUMENTS:

WALTER L. WILLIAMS NEW MEXICO 9080 REGISTERED PROFESSIONAL ENGINEER

DSGN	WLW
DR	MAS
CHK	JMS
APVD	Approved_By

NO.	DATE	REVISION	BY	APVD

VERIFY SCALE

BAR IS ONE INCH ON ORIGINAL DRAWING. 0 1" IF NOT ONE INCH ON THIS SHEET, ADJUST SCALES ACCORDINGLY.

Sdg Inc. CH2MHILL

City of Bloomfield, New Mexico
Water Treatment
Plant upgrade

CIVIL GRADING PLAN

SHEET	10 OF 47
DWG	5-C-3
DATE	9 JUNE, 2006
PROJ	450.3

FILENAME: PLOT DATE: PLOT TIME:

INVERTS:

	DESCRIPTION	INVERT
1	18" FINISHED WATER	5492.77
2	18" FINISHED WATER	5492.80
3	18" FINISHED WATER	5493.14
4	18" FINISHED WATER	5493.42
5	18" FINISHED WATER	5493.74
6	EXISTING SAS MANHOLE	5492.19
7	12" POND DRAIN	5492.24(S), 5492.34(NW)
8	12" POND DRAIN	5492.39
9	18" POND INLET	5493.96
10	SUMP	5494.56(S), 5494.46(NW)
11	SUMP	5494.84(S), 5494.74(N)
12	FUTURE DRAIN	5494.91

CONSTRUCTION NOTES:

1. ALL PIPE SHALL BE FULLY RESTRAINED EXCEPT THE 18" AND 24" SUMP DRAIN, 12" POND DRAIN, AND 18" FINISHED WATER PIPELINE.
2. EXISTING UTILITIES SHOWN ARE APPROXIMATE AND NOT ALL EXISTING UTILITIES ARE SHOWN.
3. SEE SPECIFICATIONS SECTION COORDINATION AND SCHEDULING CONSTRAINTS FOR ADDITIONAL COORDINATION REQUIREMENTS AND CONSTRUCTION CONSTRAINTS.
4. DEFLECT PIPE JOINTS AS NECESSARY TO MAINTAIN ALIGNMENT SHOWN. MAXIMUM DEFLECTION PER PIPE MANUFACTURERS RECOMMENDATIONS.
5. SEE MECHANICAL PLAN FOR CONTINUATION OF PIPES INSIDE OF BUILDING
6. ALL PRESSURE PIPE TO HAVE A MINIMUM BURY OF 4-FEET.
7. VERIFY ELEVATIONS OF EXISTING UTILITIES AND STRUCTURES PRIOR TO CONSTRUCTION.

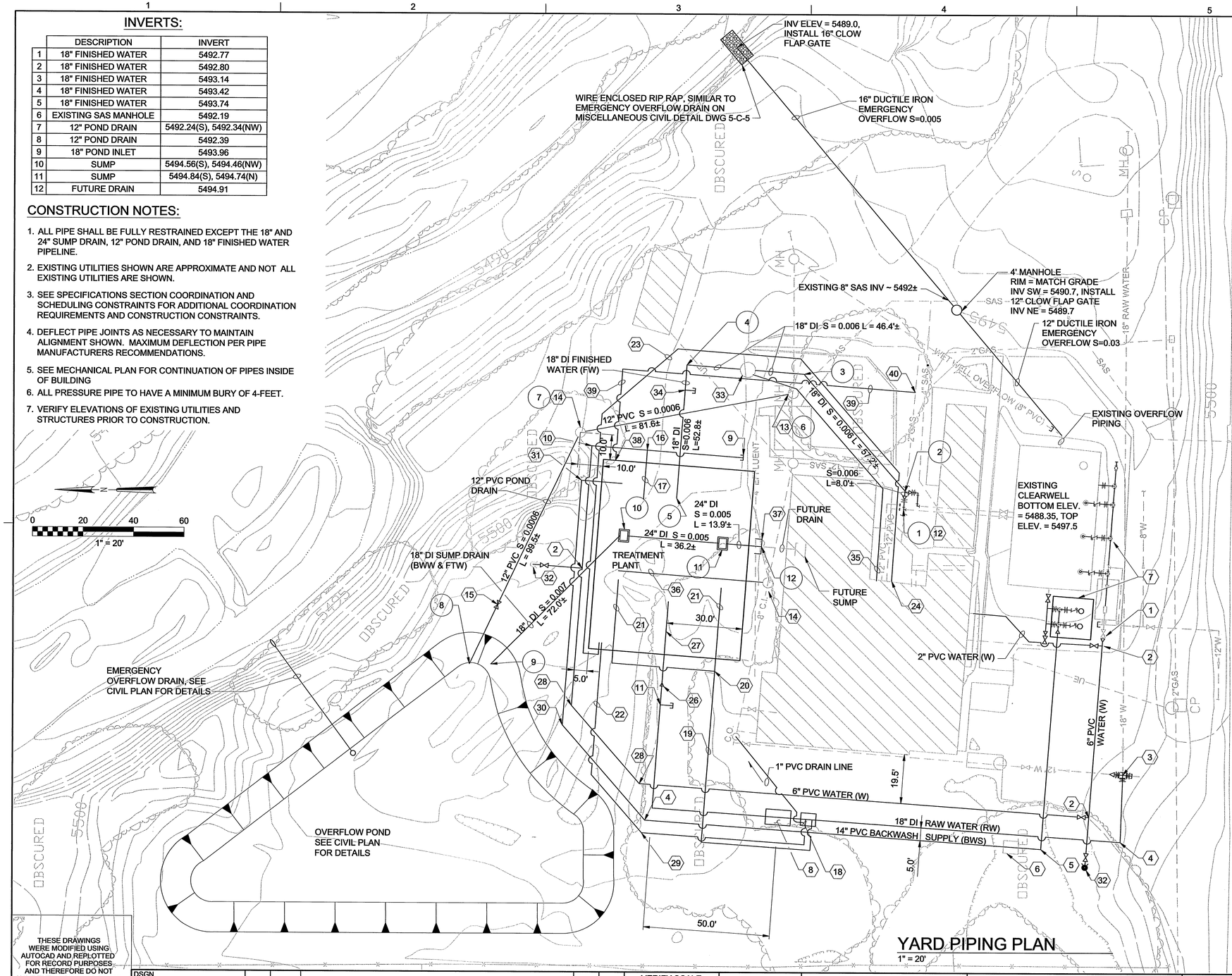

KEYED NOTES:

1. CONNECT TO EXISTING 12" GATE VALVE WITH 12" X 6" REDUCER.
2. 6" X 6" TEE, 6" GATE VALVE (V132) NORTH.
3. REPLACE EXISTING 18" TEE WITH CROSS INSTALL 18" BUTTERFLY VALVE (V500) AND 18" X 12" REDUCER NORTH, 18" BUTTERFLY VALVE (V500) W/ RESTRAINED CAP SOUTH, AND 18" BUTTERFLY VALVE (V500) WEST.
4. 18", 90° BEND
5. 14", 90° BEND, CENTERLINE ELEV=5491.0.
6. BACKWASH SUPPLY METER VAULT, SEE 1 / 5-C-9
7. SEE PIPE CONNECTION AND PUMP LAYOUT, 2 / 5-C-10
8. STATIC MIXER VAULT, SEE 1 / 5-C-12
9. RESTRAINED CAP.
10. 6", 90° BEND.
11. 18" TEE WITH RESTRAINED CAP (SOUTH).
12. CONNECT TO EXISTING FINISHED WATER PIPELINE, SEE 1 / 5-C-8
13. CONNECT TO EXISTING SANITARY SEWER MANHOLE, SEE 4 / 5-C-8 SIM.
14. 4' DIAMETER SANITARY SEWER MANHOLE, SEE 4 / 5-C-8
15. 12" GATE VALVE, (V132).
16. 4" X 6" TEE WITH 4" GATE VALVE (V132).
17. 2" COPPER WATER LINE.
18. RAW WATER SUPPLY INJECTION VAULT, SEE 2 / 5-C-12
19. 4" SLUDGE RECIRCULATION PIPELINE.
20. 4" TEE WITH 3" X 4" REDUCER EAST AND NORTH.
21. 3" SLUDGE RECIRCULATION PIPELINE.
22. 1/2" SCHEDULE 80 CPVC, DOUBLE WALL CONTAINMENT PIPING FOR FERRIC CHLORIDE INJECTION.
23. 3/4" SCHEDULE 80 CPVC, DOUBLE WALL CONTAINMENT PIPING FOR FERRIC CHLORIDE TRANSFER.
24. BULK FERRIC CHLORIDE TRANSFER, SEE 2 / 5-C-9
25. NOT USED
26. 18" X 12" REDUCER.
27. 12" DI RAW WATER.
28. 6", 45° BEND.
29. 14", 45° BEND, CENTERLINE ELEV=5493.00
30. 14", 45° BEND, CENTERLINE ELEV=5493.50
31. 14", 90° BEND, CENTERLINE ELEV=5494.50
32. FIRE HYDRANT, SEE 2 / 5-C-11
33. CHLORINE INJECTION MANHOLE, SEE 4 / 5-C-12
34. 18", TEE WITH RESTRAINED CAP.
35. 3" PVC CARRIER PIPE FOR HYPOCHLORITE SOLUTION.
36. 3" SLUDGE WASTE LINE.
37. 24" PLUG.
38. SEE 10-HV-1 FOR GAS CONTINUATION.
39. 1" GAS LINE.
40. CONNECT TO EXISTING 2" GAS LINE.

RECORD DRAWINGS

Revisions Drawn by EJA Date 11/2007

THESE RECORD DRAWINGS HAVE BEEN PREPARED, IN PART, ON THE BASIS OF INFORMATION COMPILED BY OTHERS. THEY ARE NOT INTENDED TO REPRESENT IN DETAIL THE EXACT LOCATION, TYPE OF COMPONENT NOR MANNER OF CONSTRUCTION. THE ENGINEER WILL NOT BE RESPONSIBLE FOR ANY ERRORS OR OMISSIONS WHICH HAVE BEEN INCORPORATED INTO THE RECORD DRAWINGS.

YARD PIPING PLAN

1" = 20'

THESE DRAWINGS WERE MODIFIED USING AUTOCAD AND REPLOTTED FOR RECORD PURPOSES AND THEREFORE DO NOT HAVE THE ENGINEER'S STAMP OR OTHER SIGNATURES THAT APPEAR ON THE ORIGINAL CONTRACT DRAWINGS.

DSGN	A. FRIEDT
DR	E. ARMIJO
CHK	M. BREWER
APVD	M. BREWER

NO.	DATE	REVISION	BY	APVD

VERIFY SCALE

BAR IS ONE INCH ON ORIGINAL DRAWING. 0 1"

IF NOT ONE INCH ON THIS SHEET, ADJUST SCALES ACCORDINGLY.

Sdg inc. CH2MHILL

BLOOMFIELD, NEW MEXICO
WATER TREATMENT PLANT
UPGRADE

SITE CIVIL
YARD PIPING PLAN

SHEET	11 OF 47
DWG	5-C-4
DATE	MAY 2006
PROJ	342630

FILENAME: 5_5C4D_342630.DWG PLOT DATE: 06-JUNE-2006 PLOT TIME: 00:00:00

© CH2M HILL

THIS DOCUMENT, AND THE IDEAS AND DESIGNS INCORPORATED HEREIN, AS AN INSTRUMENT OF PROFESSIONAL SERVICE, IS THE PROPERTY OF CH2M HILL AND IS NOT TO BE USED, IN WHOLE OR IN PART, FOR ANY OTHER PROJECT WITHOUT THE WRITTEN AUTHORIZATION OF CH2MHILL.

REUSE OF DOCUMENTS:

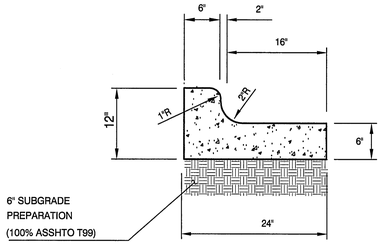

NOTES:

1. CURB & GUTTER SHALL BE CONSTRUCTED OF CLASS "A" CONCRETE (3000 PSI).
2. THE CONTRACTOR SHALL PROVIDE EXPANSION JOINTS AT 30 FEET O.C. MAX., AT CURB RETURNS, AND AT EACH SIDE OF DRIVEWAYS. CONTRACTION JOINTS SHALL BE PROVIDED AT 5 FEET O.C. MAX.
3. BACK OF CURB SHALL BE EDGED WITH A 3/8" EDGING TOOL.
4. TYPE "B" CURB & GUTTER SHALL BE USED FOR NEW CONSTRUCTION UNLESS OTHERWISE APPROVED BY THE ENGINEER.
6. EXPANSION JOINTS SHALL BE FILLED WITH PREFORMED EXPANSION JOINT FILLER.

ESTIMATED QUANTITIES:

CROSS SECTIONAL AREA = 1.3125 SQ. FT.
VOLUME PER 100 L.F. = 4.86 CU. YD.

TYPICAL CURB & GUTTER

SCALE: 1"= 1'-0"

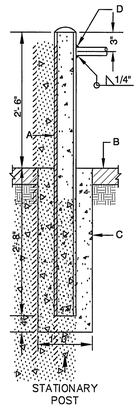

CONSTRUCTION NOTES:

A. 4" NOMINAL DIA. SCHEDULE 40 GALV. STEEL PIPE, 5'- 2" TO BE FILLED W/CONC. PAINT PIPE BRIGHT YELLOW ABOVE FINISHED GRADE.

B. PAVEMENT OR FINISHED GRADE.

C. CONC. COLLAR, 3000 PSI AT 28 DAYS, W/SMOOTH OR BROOM FINISH WHERE PAVEMENT IS ADJACENT.

D. WHERE CONNECTING BOLLARDS ARE SPECIFIED, WELD 1 1/4" NOM., SCH. 40 PIPE BETWEEN BOLLARDS.

BOLLARD DETAIL

SCALE: 3/4"=1'-0"

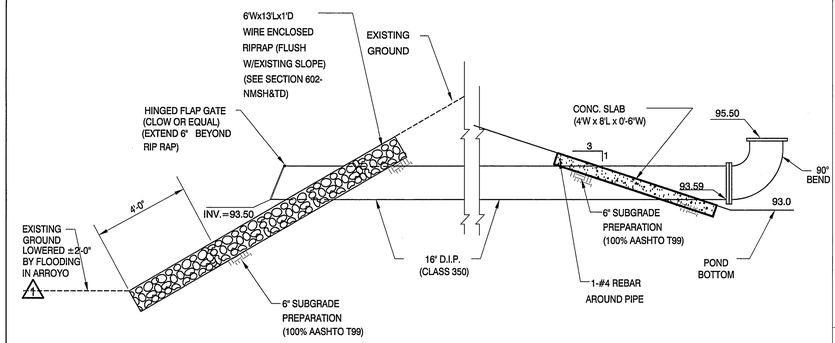

EMERGENCY OVERFLOW DRAIN

SCALE: 1"=3'-0"

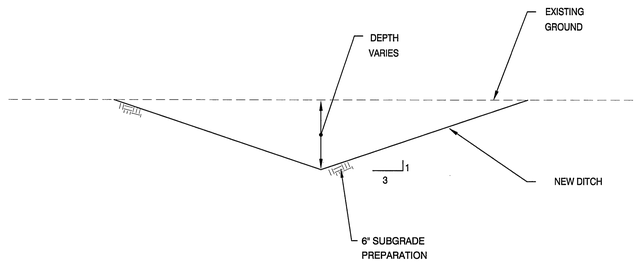

TYPICAL DITCH

SCALE: 1"=3'-0"

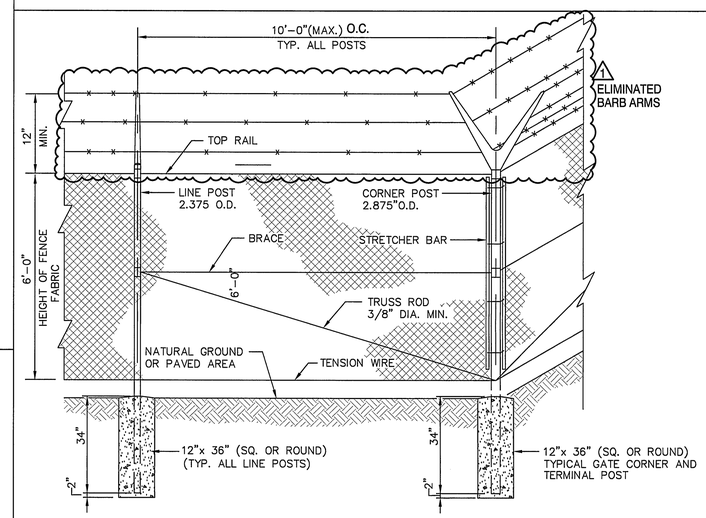

CHAIN LINK FENCE WITH V" BARB ARMS

SCALE: 1/2"= 1'-0"

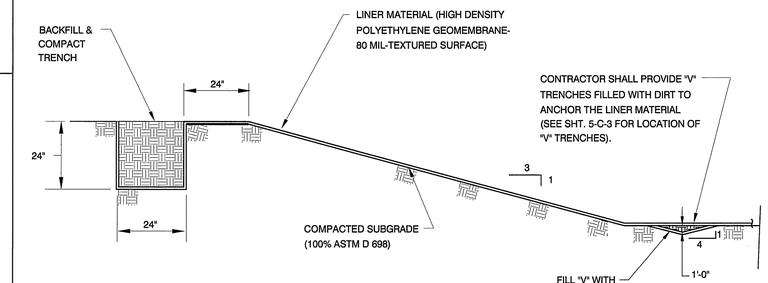

ANCHOR TRENCH DETAIL

N.T.S.

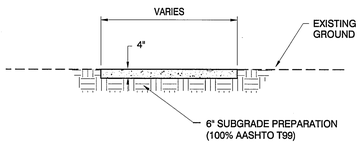

SIDEWALK NOTES

1. INSTALL CONTRACTION OR WEAKENED PLANE JOINTS AT 5'-0" INTERVALS.
2. CONCRETE SHALL BE CLASS "A" CONCRETE (3000 PSI)
3. MAXIMUM SPACING OF EXPANSION JOINTS SHALL BE 30 FEET.

SIDEWALK DETAIL

NOT TO SCALE

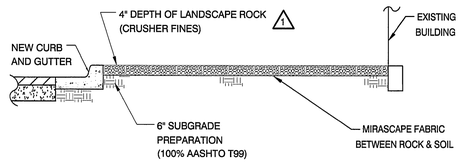

LANDSCAPE ROCK

SCALE: 1"=3'-0"

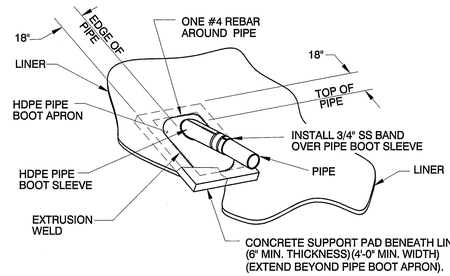

NOTES:

1. CONCRETE SURFACES TO BE STEEL TROWEL FINISHED WITH ROUNDED AND SMOOTHED EDGES.
2. MINIMUM CONCRETE STRENGTH 3000 PSI.

ISOMETRIC VIEW

PIPE PENETRATION BOOT

N.T.S.

RECORD DRAWINGS
THESE RECORD DRAWINGS HAVE BEEN PREPARED ON THE BASIS OF INFORMATION COMPILED AND FURNISHED BY CONTRACTOR AND OTHERS. THE ENGINEER WILL NOT BE RESPONSIBLE FOR ANY ERRORS OR OMISSIONS WHICH HAVE BEEN INCORPORATED INTO THIS DOCUMENT AS A RESULT.
DATE: 11/16/07

WALTER L. WILLIAMS NEW MEXICO 9080 REGISTERED PROFESSIONAL ENGINEER

DSGN	WLW
DR	MAS
CHK	JMS
APVD	Approved_By

NO.	DATE	REVISION	BY	APVD
1	11/12/07	CHANGES FOR RECORD DRAWINGS		

VERIFY SCALE
BAR IS ONE INCH ON ORIGINAL DRAWING. 0 1"
IF NOT ONE INCH ON THIS SHEET, ADJUST SCALES ACCORDINGLY.

Sdg Inc. CH2MHILL

City of Bloomfield, New Mexico
Water Treatment
Plant Upgrade

MISCELLANEOUS CIVIL DETAILS

SHEET	12 OF 47
DWG	5-C-5
DATE	9 JUNE, 2006
PROJ	450.3

FILENAME: PLOT DATE: PLOT TIME:

© SULLIVAN DESIGN GROUP, INC.
THIS DOCUMENT, AND THE IDEAS AND DESIGNS INCORPORATED HEREIN, AS AN INSTRUMENT OF PROFESSIONAL SERVICE, IS THE PROPERTY OF SULLIVAN DESIGN GROUP, INC. AND IS NOT TO BE USED, IN WHOLE OR IN PART, FOR ANY OTHER PROJECT WITHOUT THE WRITTEN AUTHORIZATION OF SULLIVAN DESIGN GROUP, INC.
REUSE OF DOCUMENTS:

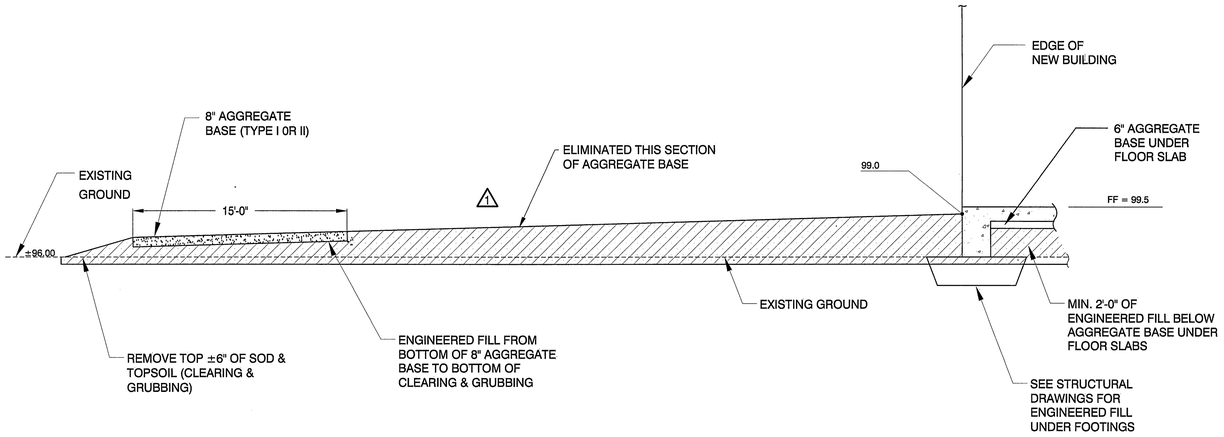

2/13 TYPICAL GRAVEL PARKING LOT SECTION (STA 2+35)

SCALE: 1"=5'-0"

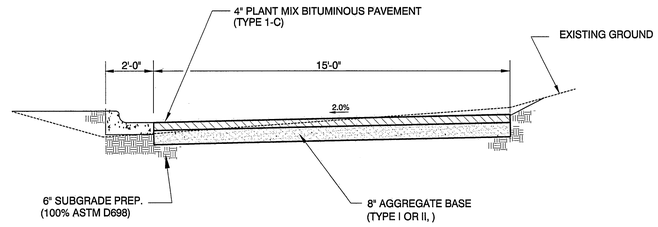

4/13 TYPICAL STREET SECTION (STA 7+00)

SCALE: 1"=3'-0"

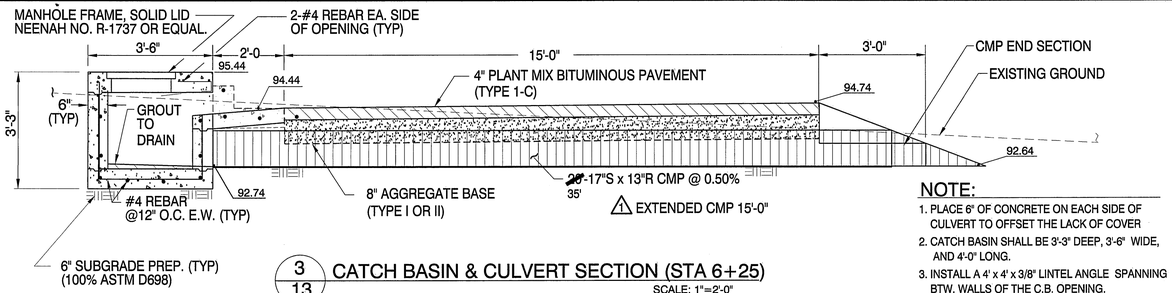

NOTE:

1. PLACE 6" OF CONCRETE ON EACH SIDE OF CULVERT TO OFFSET THE LACK OF COVER
2. CATCH BASIN SHALL BE 3'-3" DEEP, 3'-6" WIDE, AND 4'-0" LONG.
3. INSTALL A 4' x 4' x 3/8" LINTEL ANGLE SPANNING BTW. WALLS OF THE C.B. OPENING. ANGLE SHALL BE PAINTED BLACK.
4. **WARNING!** GAS MAIN IN CLOSE PROXIMITY TO NEW CULVERT.

3/13 CATCH BASIN & CULVERT SECTION (STA 6+25)

SCALE: 1"=2'-0"

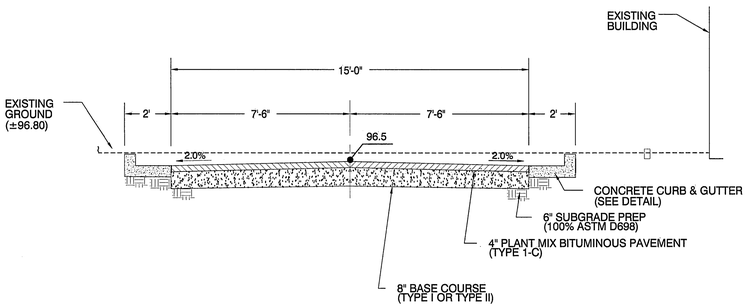

1/13 TYPICAL STREET SECTION (STA 1+30)

SCALE: 1"=3'-0"

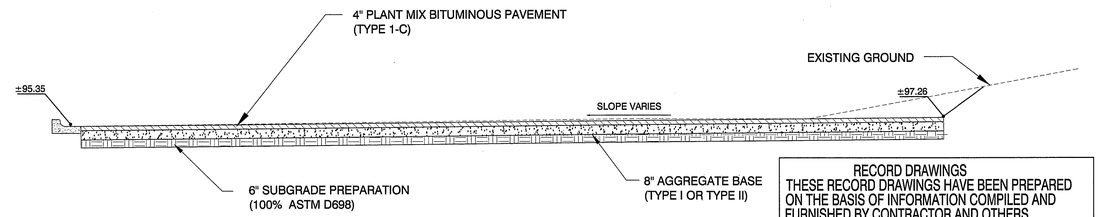

RECORD DRAWINGS
THESE RECORD DRAWINGS HAVE BEEN PREPARED ON THE BASIS OF INFORMATION COMPILED AND FURNISHED BY CONTRACTOR AND OTHERS. THE ENGINEER WILL NOT BE RESPONSIBLE FOR ANY ERRORS OR OMISSIONS WHICH HAVE BEEN INCORPORATED INTO THIS DOCUMENT AS A RESULT.
DATE: 11/16/07

5/13 TYPICAL PAVED PARKING LOT SECTION (STA 7+70)

SCALE: 1"=5'-0"

WALTER L. WILLIAMS
NEW MEXICO
9080
REGISTERED PROFESSIONAL ENGINEER

DSGN	WLW	1	11/16/07	CHANGES FOR RECORD DRAWINGS			
DR	MAS						
CHK	JMS						
APVD	Approved_By	NO.	DATE	REVISION	BY	APVD	

VERIFY SCALE
BAR IS ONE INCH ON ORIGINAL DRAWING.
0 1" IF NOT ONE INCH ON THIS SHEET, ADJUST SCALES ACCORDINGLY.

Sdg Inc. CH2MHILL

City of Bloomfield, New Mexico
Water Treatment
Plant Upgrade

TYPICAL SECTIONS - STREET & PARKING

SHEET	13 OF 47
DWG	5-C-6
DATE	9 JUNE, 2006
PROJ	450.3

FILENAME: PLOT DATE: PLOT TIME:

© SULLIVAN DESIGN GROUP, INC.
THIS DOCUMENT, AND THE IDEAS AND DESIGNS INCORPORATED HEREIN, AS AN INSTRUMENT OF PROFESSIONAL SERVICE, IS THE PROPERTY OF SULLIVAN DESIGN GROUP, INC. AND IS NOT TO BE USED, IN WHOLE OR IN PART, FOR ANY OTHER PROJECT WITHOUT THE WRITTEN AUTHORIZATION OF SULLIVAN DESIGN GROUP, INC.
REUSE OF DOCUMENTS:

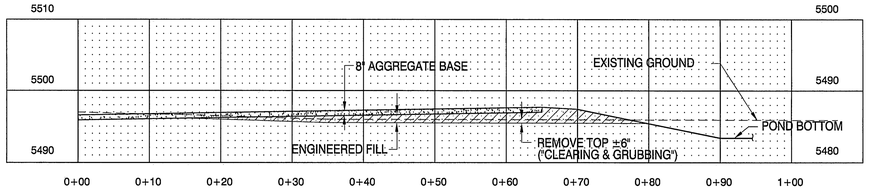

STATION 1+90

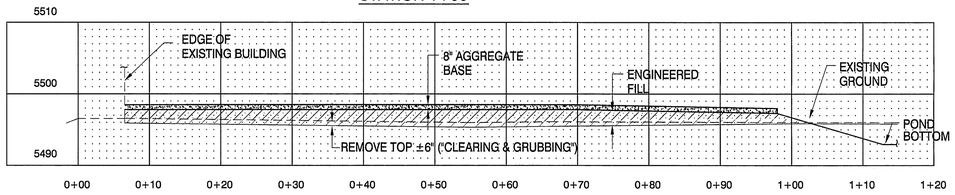

STATION 1+50

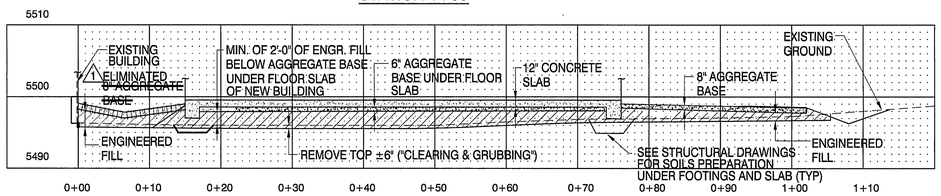

STATION 1+00

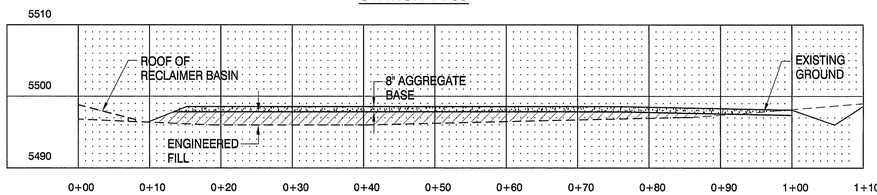

STATION 0+50

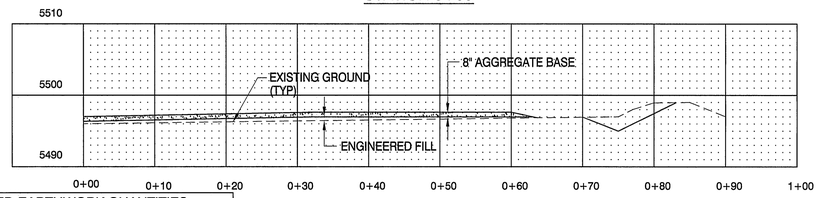

STATION 0+00

ESTIMATED EARTHWORK QUANTITIES FOR NEW BUILDING & PARKING			
DESCRIPTION	CUT CU. YDS.	FILL CU. YDS.	REMARKS
STA. 0+00 TO 0+50	0	120	
STA. 0+50 TO 1+00	0	280	
STA. 1+00 TO 1+50	0	370	
STA. 1+50 TO 1+90	0	190	
TOTAL	0	960 x 1.2 = 1152	NOTE: FILL QUANTITY ASSUMES 20% COMPACTION FACTOR. FACTOR MAY VARY

CROSS-SECTIONS NEW BUILDING & ADJOINING PARKING

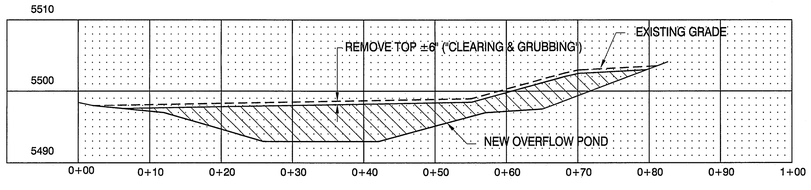

STATION 1+50

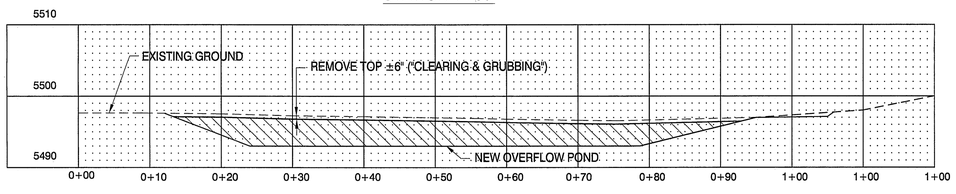

STATION 1+00

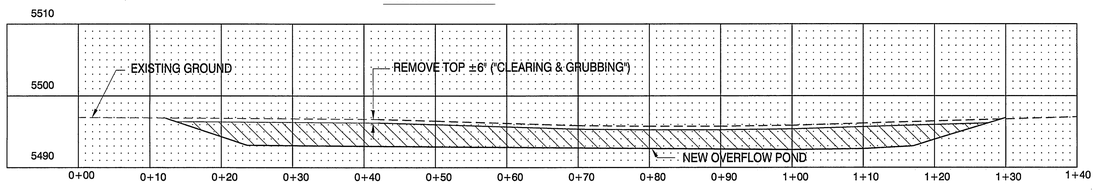

STATION 0+50

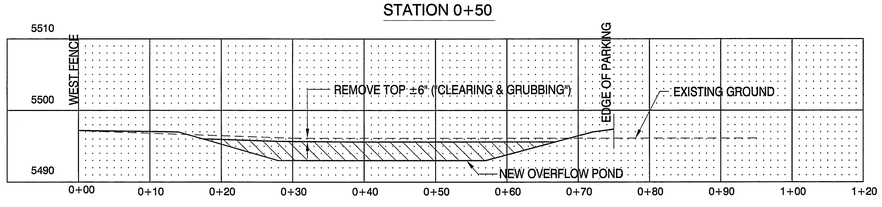

STATION 0+00

ESTIMATED EARTHWORK QUANTITIES			
DESCRIPTION	CUT CU. YDS.	FILL CU. YDS.	REMARKS
OVERFLOW POND	1285	0	
NEW BLDG & PARKING	0	960	
ROADS	450	0	
TOTAL	1735	960 x 1.2 = 1152	NOTE: FILL QUANTITY ASSUMES 20% COMPACTION FACTOR. FACTOR MAY VARY

CROSS-SECTIONS OVERFLOW POND

ESTIMATED EARTHWORK QUANTITIES FOR OVERFLOW POND			
DESCRIPTION	CUT CU. YDS.	FILL CU. YDS.	REMARKS
STA. 0+00 TO 0+50	370	0	
STA. 0+50 TO 1+00	485	0	
STA. 1+00 TO 1+50	430	0	
TOTAL	1285	0	NOTE: FILL QUANTITY ASSUMES 20% COMPACTION FACTOR. FACTOR MAY VARY

NOTES:

1. THE CROSS-SECTIONS PROVIDE THE CONTRACTOR WITH A GRAPHIC PICTURE. EARTHWORK QUANTITIES SHALL BE FIELD VERIFIED BY CONTRACTOR.
2. THE BASE LINE FOR THE OVERFLOW POND CROSS-SECTIONS IS THE WEST PROPERTY LINE (SEE CIVIL SITE PLAN)
3. THE BASE LINE FOR THE NEW BUILDING & ADJOINING PARKING IS THE NORTH SIDE OF THE EXISTING TREATMENT PLANT (SEE CIVIL SITE PLAN).
4. APPROXIMATELY 6" OF SOD & TOPSOIL SHALL BE REMOVED AS PART OF THE "CLEARING AND GRUBBING." THE SOD & TOPSOIL, ±15 LARGE TREES, DEAD BRUSH, AND OTHER ITEMS LISTED UNDER "CLEARING & GRUBBING" SHALL BE HAULED TO THE REGIONAL LANDFILL.
5. SEE STRUCTURAL DRAWINGS FOR ENGINEERED FILL UNDER THE FOOTINGS AND SLAB.
6. SEE THE "CIVIL LEGEND & NOTES" DRAWING FOR A FIELD TESTING SCHEDULE..
7. ~~THE CONTRACTOR MAY PROPOSE A PLAN FOR WASTING EXCESS MATERIAL ON SITE (ENLARGING BERMS). THIS PLAN WOULD HAVE TO BE APPROVED BY OWNER AND ENGINEER.~~ IF THE PLAN IS NOT APPROVED, THE CONTRACTOR SHALL HAUL THE MATERIAL TO A SITE DESIGNATED BY THE OWNER, NOT TO EXCEED 3.0 MILES IN ONE DIRECTION.

RECORD DRAWINGS
THESE RECORD DRAWINGS HAVE BEEN PREPARED ON THE BASIS OF INFORMATION COMPILED AND FURNISHED BY CONTRACTOR AND OTHERS.
THE ENGINEER WILL NOT BE RESPONSIBLE FOR ANY ERRORS OR OMISSIONS WHICH HAVE BEEN INCORPORATED INTO THIS DOCUMENT AS A RESULT.
DATE: 11/16/07

WALTER L. WILLIAMS NEW MEXICO 9080 REGISTERED PROFESSIONAL ENGINEER

DSGN	WLW
DR	MAS
CHK	JMS
APVD	Approved_By

NO.	DATE	REVISION	BY	APVD
1	11/17/07	CHANGE FOR RECORD DRAWINGS		

VERIFY SCALE
BAR IS ONE INCH ON ORIGINAL DRAWING.
0 1"
IF NOT ONE INCH ON THIS SHEET, ADJUST SCALES ACCORDINGLY.

Sdg Inc. CH2MHILL

City of Bloomfield, New Mexico
Water Treatment
Plant Upgrade

GRADING CROSS SECTIONS

SHEET	14 OF 47
DWG	5-C-7
DATE	9 JUNE, 2006
PROJ	450.3

FILENAME: PLOT DATE: PLOT TIME:

©SULLIVAN DESIGN GROUP, INC.
THIS DOCUMENT, AND THE IDEAS AND DESIGNS INCORPORATED HEREIN, AS AN INSTRUMENT OF PROFESSIONAL SERVICE, IS THE PROPERTY OF SULLIVAN DESIGN GROUP, INC. AND IS NOT TO BE USED, IN WHOLE OR IN PART, FOR ANY OTHER PROJECT WITHOUT THE WRITTEN AUTHORIZATION OF SULLIVAN DESIGN GROUP, INC.
REUSE OF DOCUMENTS:

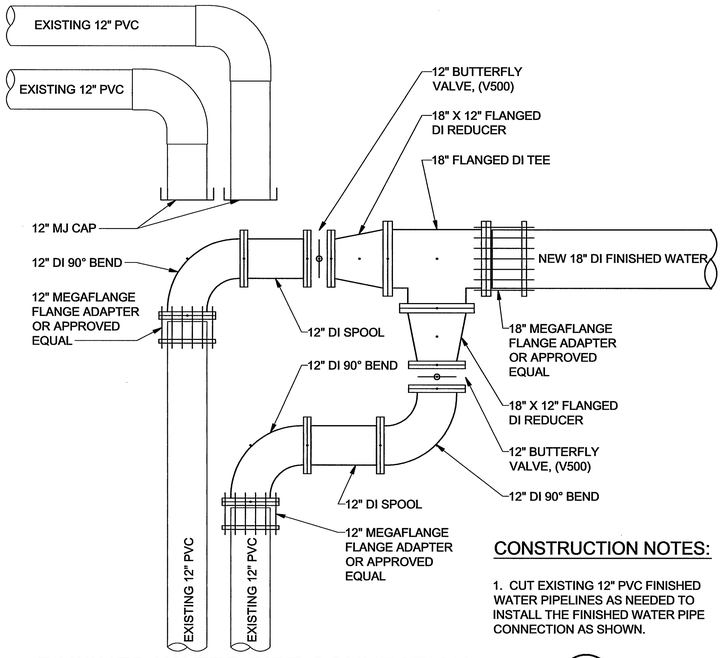

CONSTRUCTION NOTES:

1. CUT EXISTING 12" PVC FINISHED WATER PIPELINES AS NEEDED TO INSTALL THE FINISHED WATER PIPE CONNECTION AS SHOWN.

FINISHED WATER PIPE CONNECTION 1

1/2" = 1'-0" 5-C-4

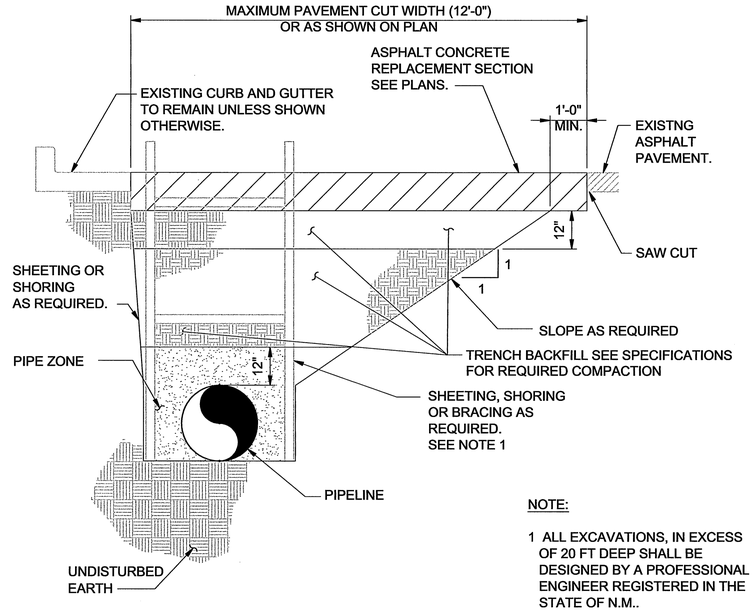

NOTE:

1 ALL EXCAVATIONS, IN EXCESS OF 20 FT DEEP SHALL BE DESIGNED BY A PROFESSIONAL ENGINEER REGISTERED IN THE STATE OF N.M..

TYPICAL TRENCH DETAIL INSIDE ROADWAY 2

N.T.S.

NOTES: 1. ALL EXCAVATIONS, IN EXCESS OF 20 FT. DEEP SHALL BE DESIGNED BY A PROFESSIONAL ENGINEER REGISTERED IN THE STATE OF N.M.

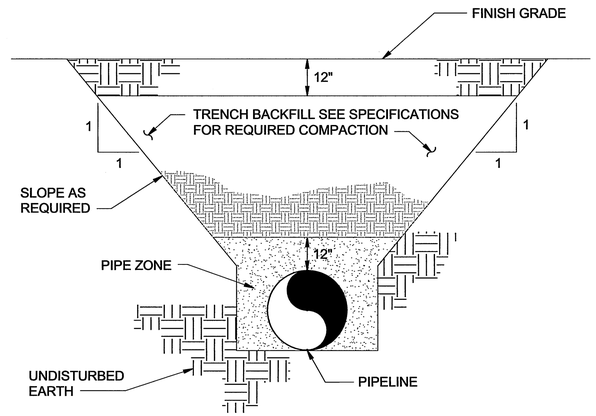

TYPICAL TRENCH DETAIL OUTSIDE ROADWAY 3

N.T.S.

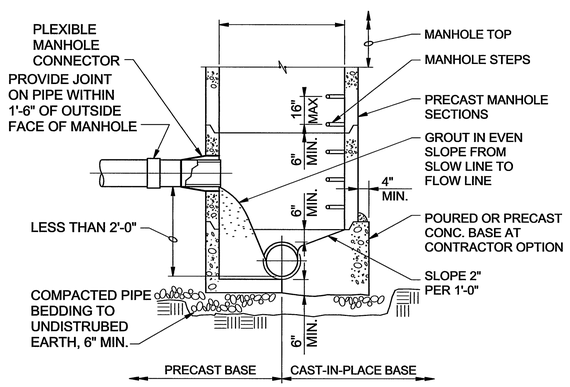

SANITARY SEWER MANHOLE 4

N.T.S. 5-C-4

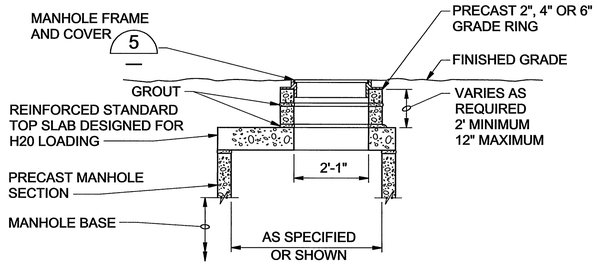

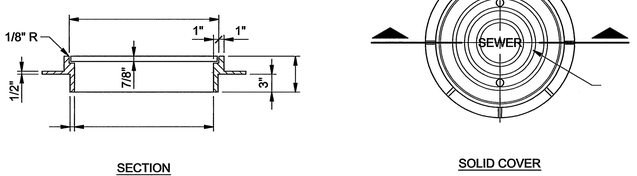

MANHOLE FRAME AND COVER 5

N.T.S.

RECORD DRAWINGS

Revisions Drawn by EJA Date 11/2007

THESE RECORD DRAWINGS HAVE BEEN PREPARED, IN PART, ON THE BASIS OF INFORMATION COMPILED BY OTHERS. THEY ARE NOT INTENDED TO REPRESENT IN DETAIL THE EXACT LOCATION, TYPE OF COMPONENT NOR MANNER OF CONSTRUCTION. THE ENGINEER WILL NOT BE RESPONSIBLE FOR ANY ERRORS OR OMISSIONS WHICH HAVE BEEN INCORPORATED INTO THE RECORD DRAWINGS.

THESE DRAWINGS WERE MODIFIED USING AUTOCAD AND REPLOTTED FOR RECORD PURPOSES AND THEREFORE DO NOT HAVE THE ENGINEER'S STAMP OR OTHER SIGNATURES THAT APPEAR ON THE ORIGINAL CONTRACT DRAWINGS.

DSGN	A. FRIEDT
DR	E. ARMIJO
CHK	M. BREWER
APVD	M. BREWER

NO.	DATE	REVISION	BY	APVD

VERIFY SCALE
BAR IS ONE INCH ON ORIGINAL DRAWING.
0 1"
IF NOT ONE INCH ON THIS SHEET, ADJUST SCALES ACCORDINGLY.

Sdg inc. CH2MHILL

BLOOMFIELD, NEW MEXICO
WATER TREATMENT PLANT
UPGRADE

SITE CIVIL
MISCELLANEOUS YARD PIPING DETAILS

SHEET	15 OF 47
DWG	5-C-8
DATE	MAY 2006
PROJ	342630

FILENAME5_5C8D_342630.DWG PLOT DATE: 10-MAY-2006 PLOT TIME: 00:00:00

© CH2M HILL
THIS DOCUMENT, AND THE IDEAS AND DESIGNS INCORPORATED HEREIN, AS AN INSTRUMENT OF PROFESSIONAL SERVICE, IS THE PROPERTY OF CH2M HILL AND IS NOT TO BE USED, IN WHOLE OR IN PART, FOR ANY OTHER PROJECT WITHOUT THE WRITTEN AUTHORIZATION OF CH2MHILL.
REUSE OF DOCUMENTS:

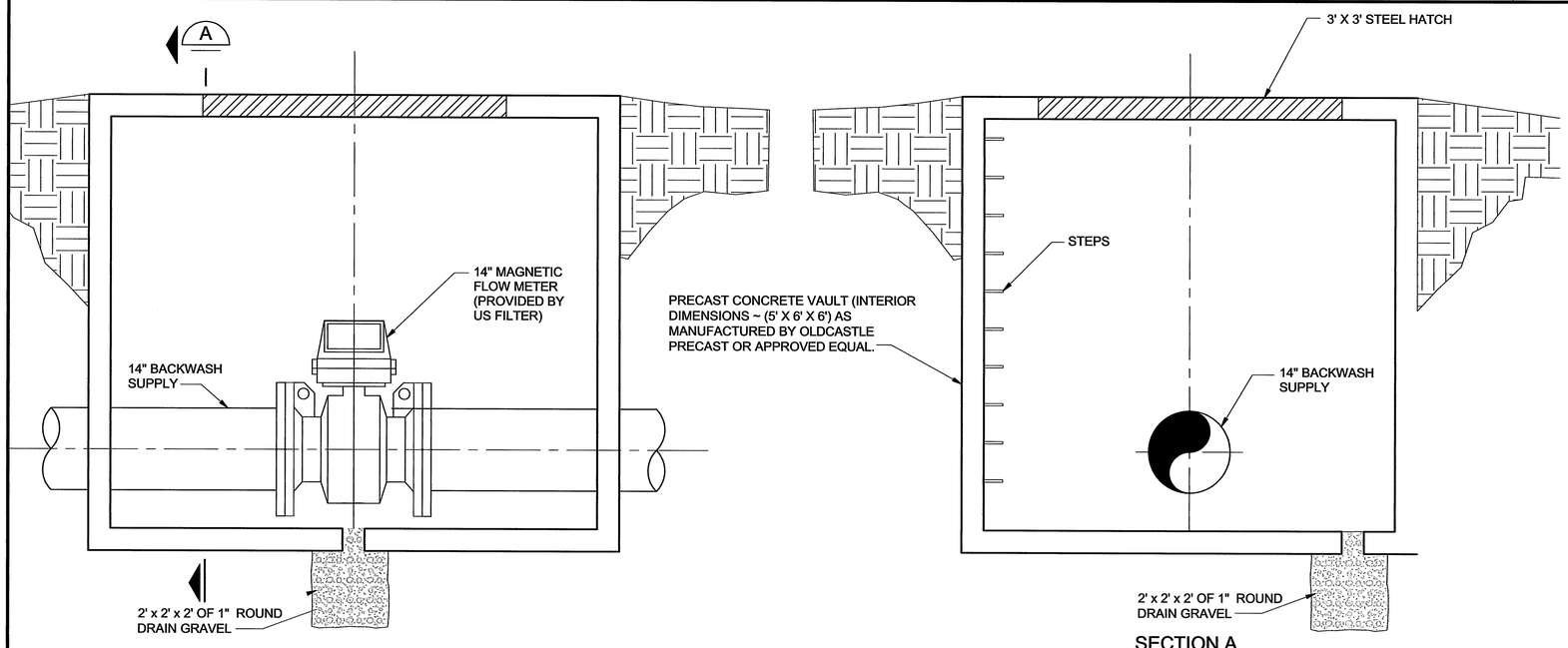

BACKWASH SUPPLY METER VAULT (1)

N.T.S. 5-C-4

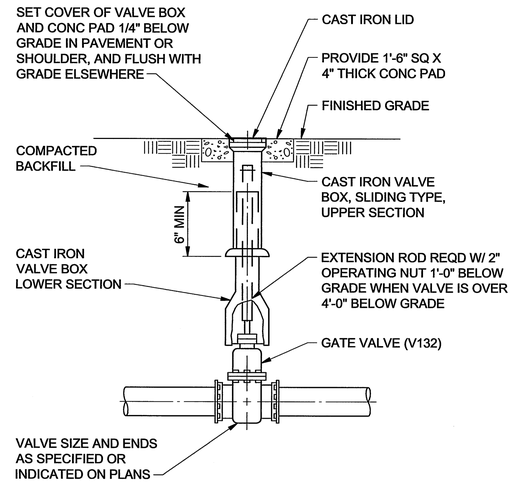

BURIED GATE VALVE BOX (3)

N.T.S. 5-C-4

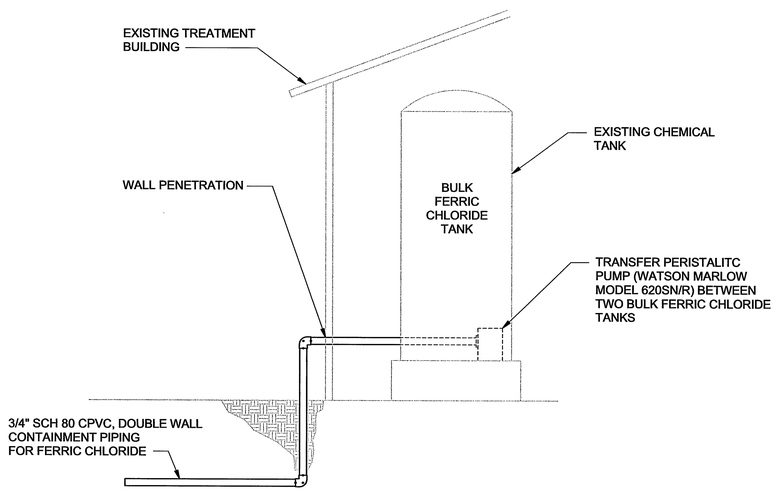

BULK FERRIC CHLORIDE TRANSFER (2)

NTS 5-C-4

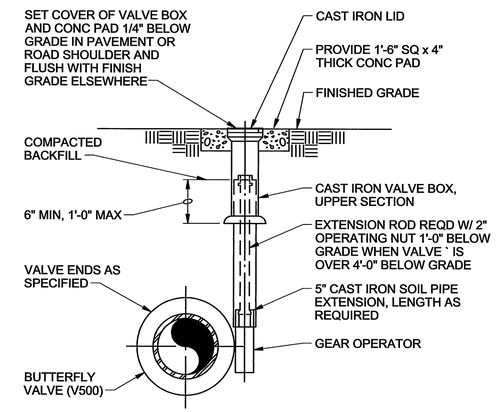

BURIED BUTTERFLY VALVE BOX (4)

N.T.S. 5-C-4

RECORD DRAWINGS

Revisions Drawn by EJA Date 11/2007

THESE RECORD DRAWINGS HAVE BEEN PREPARED, IN PART, ON THE BASIS OF INFORMATION COMPILED BY OTHERS. THEY ARE NOT INTENDED TO REPRESENT IN DETAIL THE EXACT LOCATION, TYPE OF COMPONENT NOR MANNER OF CONSTRUCTION. THE ENGINEER WILL NOT BE RESPONSIBLE FOR ANY ERRORS OR OMISSIONS WHICH HAVE BEEN INCORPORATED INTO THE RECORD DRAWINGS.

THESE DRAWINGS WERE MODIFIED USING AUTOCAD AND REPLOTTED FOR RECORD PURPOSES AND THEREFORE DO NOT HAVE THE ENGINEER'S STAMP OR OTHER SIGNATURES THAT APPEAR ON THE ORIGINAL CONTRACT DRAWINGS.

DSGN	A. FRIEDT
DR	E. ARMIJO
CHK	M. BREWER
APVD	M. BREWER

NO.	DATE	REVISION	BY	APVD

VERIFY SCALE

BAR IS ONE INCH ON ORIGINAL DRAWING. 0 1"

IF NOT ONE INCH ON THIS SHEET, ADJUST SCALES ACCORDINGLY.

Sdg Inc. CH2MHILL

BLOOMFIELD, NEW MEXICO
WATER TREATMENT PLANT
UPGRADE

SITE CIVIL
MISCELLANEOUS
YARD PIPING
DETAILS

SHEET	16 OF 47
DWG	5-C-9
DATE	MAY 2006
PROJ	342630

FILENAME5_5C9D_342630.DWG PLOT DATE: 10-MAY-2006 PLOT TIME: 00:00:00

© CH2M HILL

THIS DOCUMENT, AND THE IDEAS AND DESIGNS INCORPORATED HEREIN, AS AN INSTRUMENT OF PROFESSIONAL SERVICE, IS THE PROPERTY OF CH2M HILL AND IS NOT TO BE USED, IN WHOLE OR IN PART, FOR ANY OTHER PROJECT WITHOUT THE WRITTEN AUTHORIZATION OF CH2MHILL.

REUSE OF DOCUMENTS:

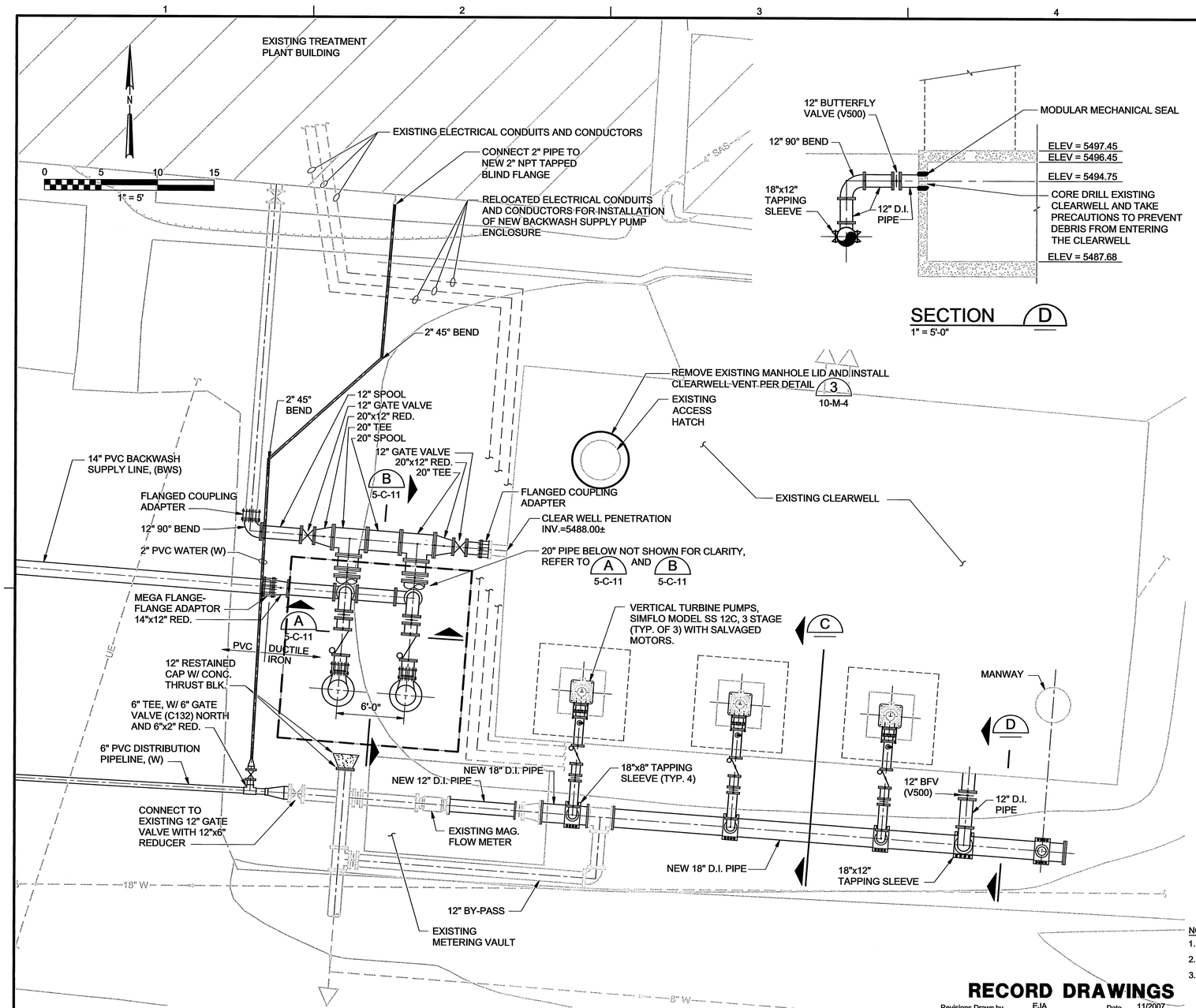

PIPE CONNECTION AND PUMP LAYOUT

1" = 5'-0"

2 5-C-4

SECTION D

1" = 5'-0"

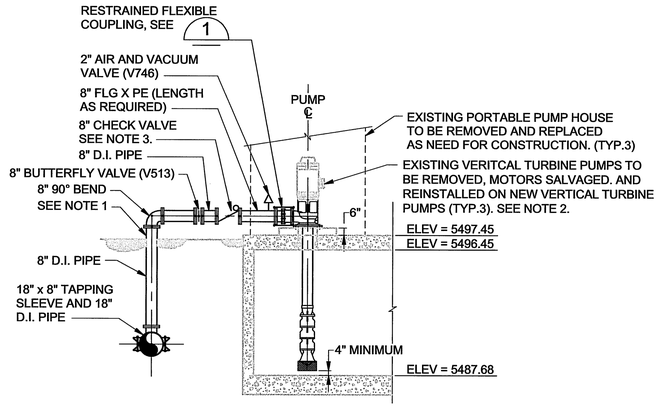

SECTION C

1"=5'-0"

NOTES:

1. 8" PUMP DISCHARGE PIPE AND VALVES TO BE HEAT TRACED AND INSULATED FROM PUMP TO 3-FEET BELOW GRADE, TYPICAL.
2. CONTRACTOR SHALL REMOVE AND STORE EXISTING 60 HORSEPOWER MOTORS FOR REUSE. REMOVE EXISTING VERTICAL TURBINE PUMPS, DISCHARGE HEAD, COLUMN, BOWLS, ETC. IN THERE ENTIRETY. INSTALL NEW VERTICAL TURBINE PUMPS AND EXISTING 60 HORSEPOWER MOTORS. NEW VERTICAL TURBINE PUMPS SHALL BE SIMFLO MODEL SS 12C, 3 STAGE VERTICAL TURBINE PUMP.
3. 8" CHECK VALVE SHALL BE SURGEBUSTER SWING CHECK VALVE MODEL NO. 7208 AS MANUFACTURED BY VAL-MATIC VALVE AND MANUFACTURING CORP.
4. CONTRACTOR TO VERIFY ALL DIMENSIONS/ELEVATIONS IN THE FIELD.

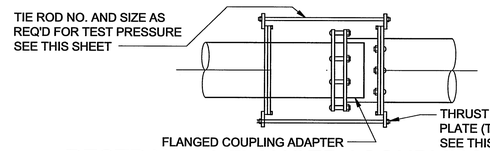

RESTRAINED FLANGED / COUPLING ADAPTER RESTRAINED FLEXIBLE COUPLING

NTS

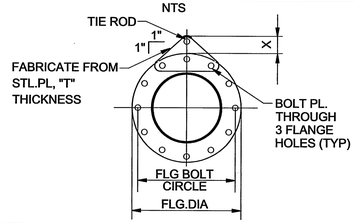

PIPE SIZE	X	"T" @ TEST PRESS = 150 PSI
8"	2 3/4 "	5/8 "

TIE ROD SCHEDULE			
TEST PRESSURE		150 PSI	
PIPE DIAM. (IN.)	MINIMUM PIPE WALL THICKNESS (IN.)	TIE RODS	
		DIA. (IN.)	NO. REQ'D
8	3/16	5/8	2

NOTES:

1. TIE RODS SHALL CONFORM TO ASTM A193 GRADE B7.
2. NUTS SHALL CONFORM TO ASTM A194 GRADE 2H.
3. PLATE SHALL CONFORM TO ASTM A283 GRADE D.
4. TIE ROD NUTS SHALL BE TIGHTENED GRADUALLY AND EQUALLY IN STAGES TO PREVENT UNEVEN ALIGNMENT AND TO ALLOW EQUAL STRESS ON ALL TIE RODS UNDER PRESSURE. TIGHTEN UNTIL SNUG. THREADS SHALL PROTRUDE FROM NUTS. PEEN THREADS AFTER TIGHTENING NUTS.
5. CONTRACTOR SHALL USE DATA FOR ONLY THOSE PIPE SIZES AND TEST PRESSURES SPECIFIED IN THIS CONTRACT.
6. FOR 2, 3, AND 4-INCH PIPING USE VALUES TABULATED FOR 6-INCH PIPE.

THRUST TIE ROD/CONNECTION PLATE

NTS

DETAIL 1 N.T.S.

RECORD DRAWINGS

Revisions Drawn by EJA Date 11/2007

THESE RECORD DRAWINGS HAVE BEEN PREPARED, IN PART, ON THE BASIS OF INFORMATION COMPILED BY OTHERS. THEY ARE NOT INTENDED TO REPRESENT IN DETAIL THE EXACT LOCATION, TYPE OF COMPONENT NOR MANNER OF CONSTRUCTION. THE ENGINEER WILL NOT BE RESPONSIBLE FOR ANY ERRORS OR OMISSIONS WHICH HAVE BEEN INCORPORATED INTO THE RECORD DRAWINGS.

THESE DRAWINGS WERE MODIFIED USING AUTOCAD AND REPLOTTED FOR RECORD PURPOSES AND THEREFORE DO NOT HAVE THE ENGINEER'S STAMP OR OTHER SIGNATURES THAT APPEAR ON THE ORIGINAL CONTRACT DRAWINGS.

DSGN	A. FRIEDT
DR	E. ARMIJO
CHK	M. BREWER
APVD	M. BREWER

NO.	DATE	REVISION	BY	APVD

VERIFY SCALE

BAR IS ONE INCH ON ORIGINAL DRAWING. IF NOT ONE INCH ON THIS SHEET, ADJUST SCALES ACCORDINGLY.

Sdg inc. CH2MHILL

BLOOMFIELD, NEW MEXICO
WATER TREATMENT PLANT
UPGRADE

SITE CIVIL
MISCELLANEOUS YARD PIPING DETAILS

SHEET	17 OF 47
DWG	5-C-10
DATE	MAY 2006
PROJ	342630

FILENAME5_5C10D_342630.DWG PLOT DATE: 10-MAY-2006 PLOT TIME: 00:00:00

©CH2M HILL
THIS DOCUMENT, AND THE IDEAS AND DESIGNS INCORPORATED HEREIN, AS AN INSTRUMENT OF PROFESSIONAL SERVICE, IS THE PROPERTY OF CH2M HILL AND IS NOT TO BE USED, IN WHOLE OR IN PART, FOR ANY OTHER PROJECT WITHOUT THE WRITTEN AUTHORIZATION OF CH2MHILL.
REUSE OF DOCUMENTS:

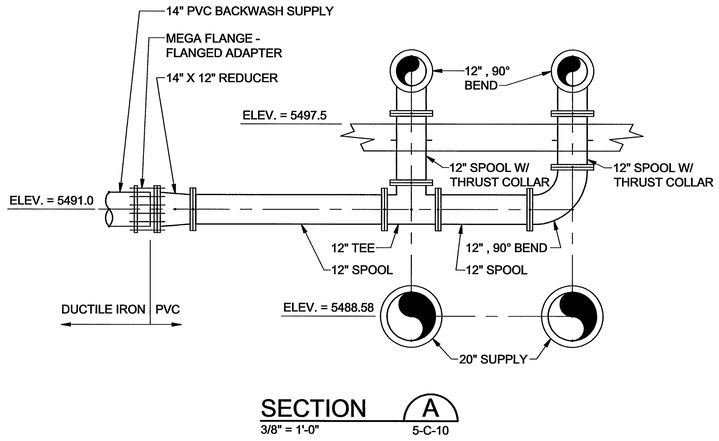

SECTION A
3/8" = 1'-0" 5-C-10

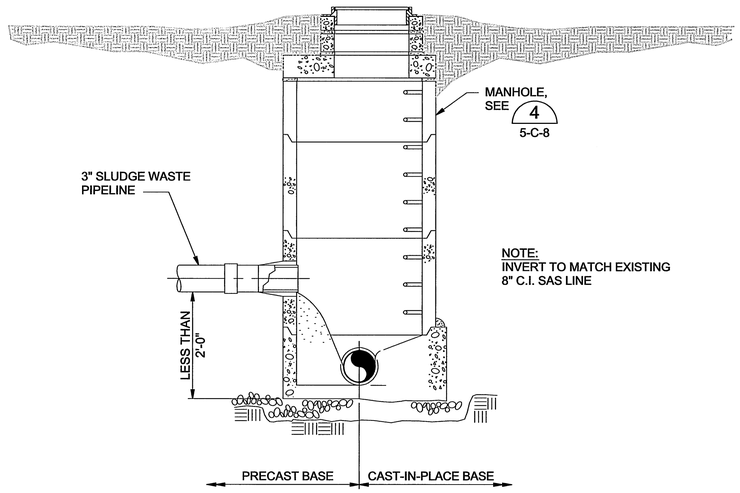

SLUDGE WASTE MANHOLE
N.T.S. 1 5-C-4

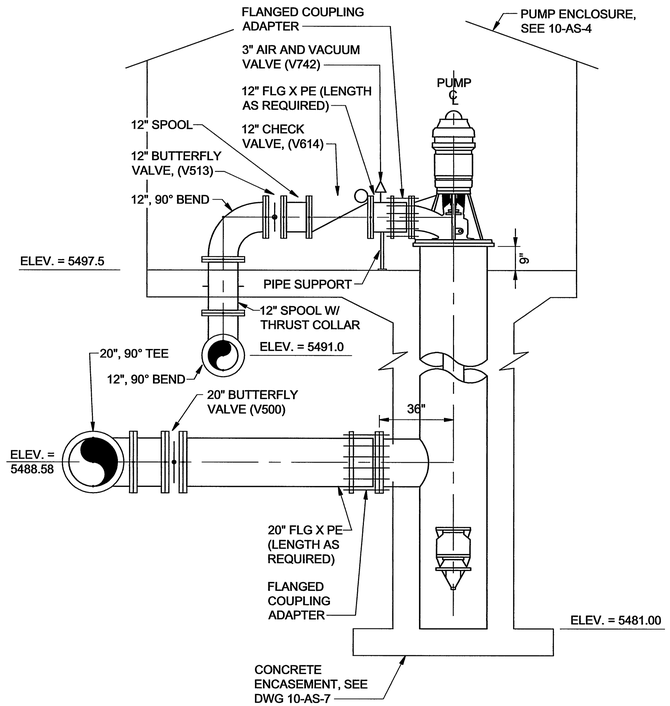

SECTION B
3/8" = 1'-0" 5-C-10

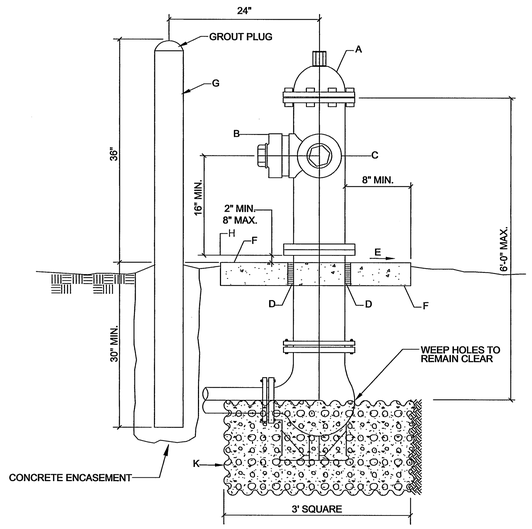

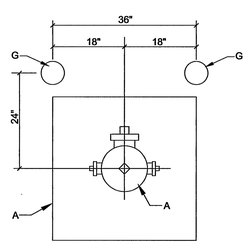

PLAN

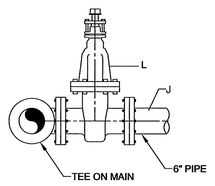

GENERAL NOTES:

1. ALL FIRE HYDRANTS SHALL HAVE A MINIMUM CLEARANCE OF 3' RADIUS FROM CENTER OF HYDRANT TO ALL OBSTRUCTIONS.
2. HYDRANT LEG SHALL BE VALVED.
3. CONTRACTOR SHALL BE RESPONSIBLE FOR SETTING TOP FLANGE OF FIRE HYDRANT TO THE CONTROLLED ELEVATION LINE.
4. PUMPER NOZZLE TO BE SET FACING THE TRAVELED WAY, UNLESS OTHERWISE NOTED ON PLANS.

CONSTRUCTION NOTES:

A. FIRE HYDRANT TO BE MUELLER SUPER CENTURION 250 (A-421)
B. PUMPER NOZZLE 4 1/2".
C. HOSE NOZZLE 2 1/2".
D. 1/2" EXPANSION JOINT MATERIAL.
E. SLOPE 1/4" PER FOOT.
F. 3'x3'x6" CONCRETE SQUARE PAD, TO BE CONSTRUCTED AROUND FIRE HYDRANT'S CENTER LINE WHEN NOT LOCATED WITHIN SIDEWALK OR CONCRETE AREA.
G. 4" DIA. SCHEDULE 40 STEEL PIPE, GRIND SMOOTH, FILL WITH CONCRETE AND PAINT AS SPECIFIED.
H. CONTROLLED ELEVATION LINE, LEVEL IN ALL DIRECTIONS.
J. USE OF RESTRAINED JOINTS IS MANDATORY. ALL FIRE HYDRANT LEG PIPING AND FITTINGS INCLUDING TEE ON MAIN SHALL BE RESTRAINED JOINT.
K. GRAVEL DRAIN POCKET, COVER TOP SURFACE WITH TAR PAPER.
L. IF VALVE IS REQUIRED, VALVE SHALL BE CONNECTED TO TEE AT MAIN.

FIRE HYDRANT
N.T.S. 2 5-C-4

RECORD DRAWINGS

Revisions Drawn by EJA Date 11/2007

THESE RECORD DRAWINGS HAVE BEEN PREPARED, IN PART, ON THE BASIS OF INFORMATION COMPILED BY OTHERS. THEY ARE NOT INTENDED TO REPRESENT IN DETAIL THE EXACT LOCATION, TYPE OF COMPONENT NOR MANNER OF CONSTRUCTION. THE ENGINEER WILL NOT BE RESPONSIBLE FOR ANY ERRORS OR OMISSIONS WHICH HAVE BEEN INCORPORATED INTO THE RECORD DRAWINGS.

THESE DRAWINGS WERE MODIFIED USING AUTOCAD AND REPLOTTED FOR RECORD PURPOSES AND THEREFORE DO NOT HAVE THE ENGINEER'S STAMP OR OTHER SIGNATURES THAT APPEAR ON THE ORIGINAL CONTRACT DRAWINGS.

DSGN	A. FRIEDT
DR	E. ARMIJO
CHK	M. BREWER
APVD	M. BREWER

NO.	DATE	REVISION	BY	APVD

VERIFY SCALE
BAR IS ONE INCH ON ORIGINAL DRAWING.
0 1"
IF NOT ONE INCH ON THIS SHEET, ADJUST SCALES ACCORDINGLY.

Sdg Inc. CH2MHILL

BLOOMFIELD, NEW MEXICO
WATER TREATMENT PLANT
UPGRADE

SITE CIVIL
MISCELLANEOUS YARD PIPING DETAILS

SHEET	18 OF 47
DWG	5-C-11
DATE	MAY 2006
PROJ	342630

FILENAME5_5C11D_342630.DWG PLOT DATE: 10-MAY-2006 PLOT TIME: 00:00:00

© CH2M HILL
THIS DOCUMENT, AND THE IDEAS AND DESIGNS INCORPORATED HEREIN, AS AN INSTRUMENT OF PROFESSIONAL SERVICE, IS THE PROPERTY OF CH2M HILL AND IS NOT TO BE USED, IN WHOLE OR IN PART, FOR ANY OTHER PROJECT WITHOUT THE WRITTEN AUTHORIZATION OF CH2MHILL.
REUSE OF DOCUMENTS:

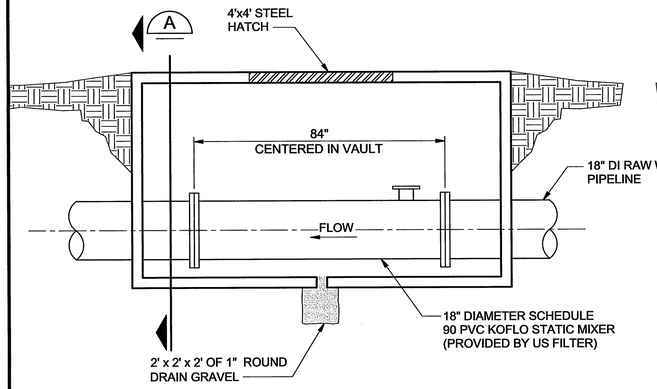

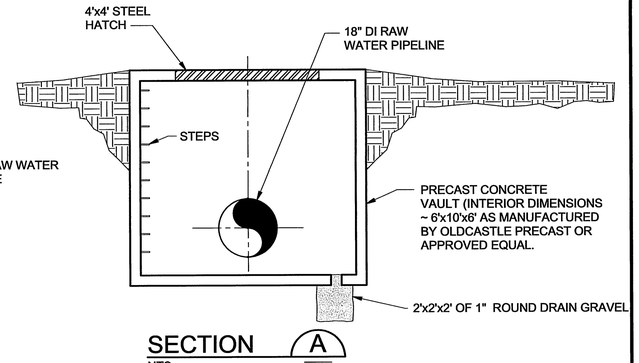

SECTION A
NTS

STATIC MIXER VAULT 1
NTS 5-C-4

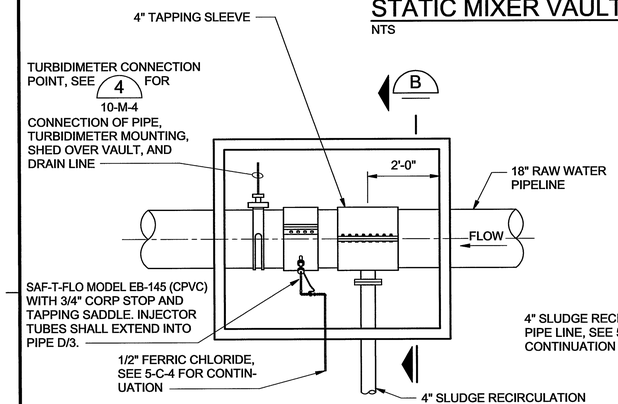

PLAN

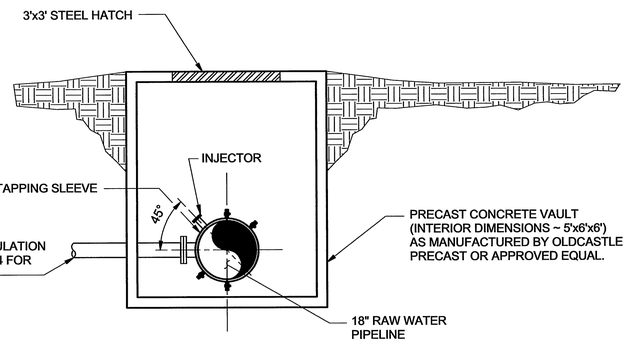

SECTION B
NTS

RAW WATER SUPPLY INJECTION VAULT 2
NTS 5-C-4

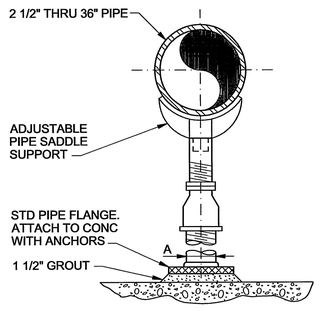

DIMENSION TABLE	
PIPE SIZE	A
2-1/2"	2-1/2"
3"	2-1/2"
4"	3"
6"	3"
8"	3"
10"	3"
12"	3"
14"	4"
16"	4"
20"	6"
24"	6"
30"	6"
36"	6"

PIPE SUPPORT 3
NTS

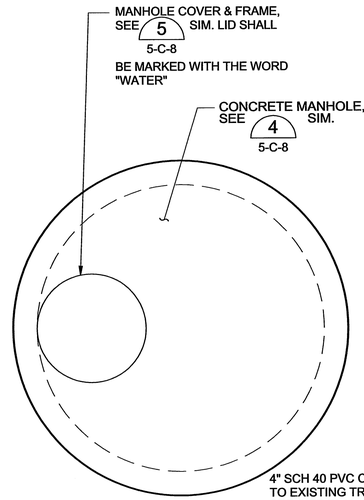

TOP PLAN

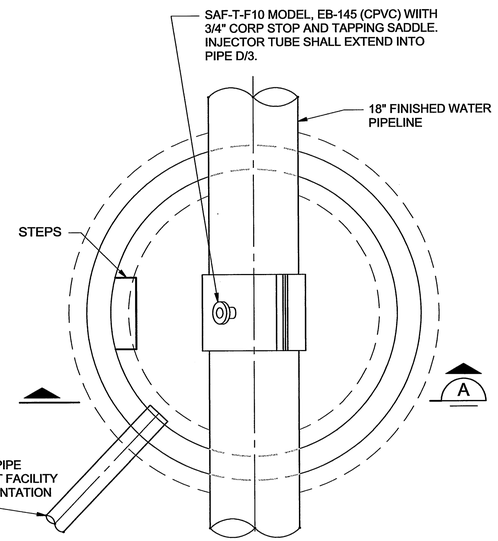

PLAN

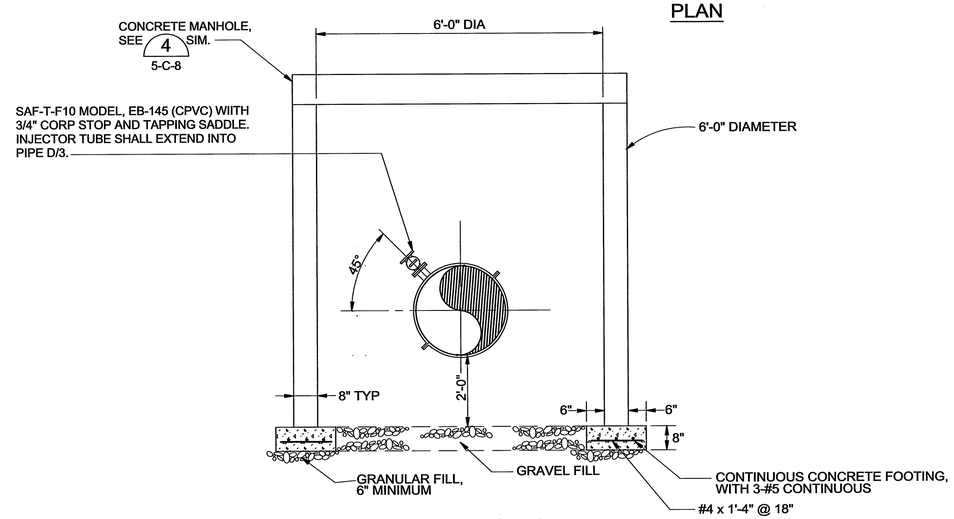

SECTION A

NOTES:

1. HEIGHT OF MANHOLE VARIES, SEE SITE PLAN.
2. MANHOLE TO BE RATED FOR H2O LOADING

CHEMICAL INJECTION VAULT DETAIL 4
N.T.S. 5-C-4

RECORD DRAWINGS

Revisions Drawn by EJA Date 11/2007

THESE RECORD DRAWINGS HAVE BEEN PREPARED, IN PART, ON THE BASIS OF INFORMATION COMPILED BY OTHERS. THEY ARE NOT INTENDED TO REPRESENT IN DETAIL THE EXACT LOCATION, TYPE OF COMPONENT NOR MANNER OF CONSTRUCTION. THE ENGINEER WILL NOT BE RESPONSIBLE FOR ANY ERRORS OR OMISSIONS WHICH HAVE BEEN INCORPORATED INTO THE RECORD DRAWINGS.

THESE DRAWINGS WERE MODIFIED USING AUTOCAD AND REPLOTTED FOR RECORD PURPOSES AND THEREFORE DO NOT HAVE THE ENGINEER'S STAMP OR OTHER SIGNATURES THAT APPEAR ON THE ORIGINAL CONTRACT DRAWINGS.

DSGN	A. FRIEDT
DR	E. ARMIJO
CHK	M. BREWER
APVD	M. BREWER

NO.	DATE	REVISION	BY	APVD

VERIFY SCALE
BAR IS ONE INCH ON ORIGINAL DRAWING. 0 1"
IF NOT ONE INCH ON THIS SHEET, ADJUST SCALES ACCORDINGLY.

Sdg inc. CH2MHILL

BLOOMFIELD, NEW MEXICO
WATER TREATMENT PLANT
UPGRADE

SITE CIVIL
MISCELLANEOUS YARD PIPING DETAILS

SHEET	19 OF 47
DWG	5-C-12
DATE	MAY 2006
PROJ	342630

FILENAME5_5C12D_342630.DWG PLOT DATE: 10-MAY-2006 PLOT TIME: 00:00:00

©CH2M HILL
THIS DOCUMENT, AND THE IDEAS AND DESIGNS INCORPORATED HEREIN, AS AN INSTRUMENT OF PROFESSIONAL SERVICE, IS THE PROPERTY OF CH2M HILL AND IS NOT TO BE USED, IN WHOLE OR IN PART, FOR ANY OTHER PROJECT WITHOUT THE WRITTEN AUTHORIZATION OF CH2M HILL.
REUSE OF DOCUMENTS:

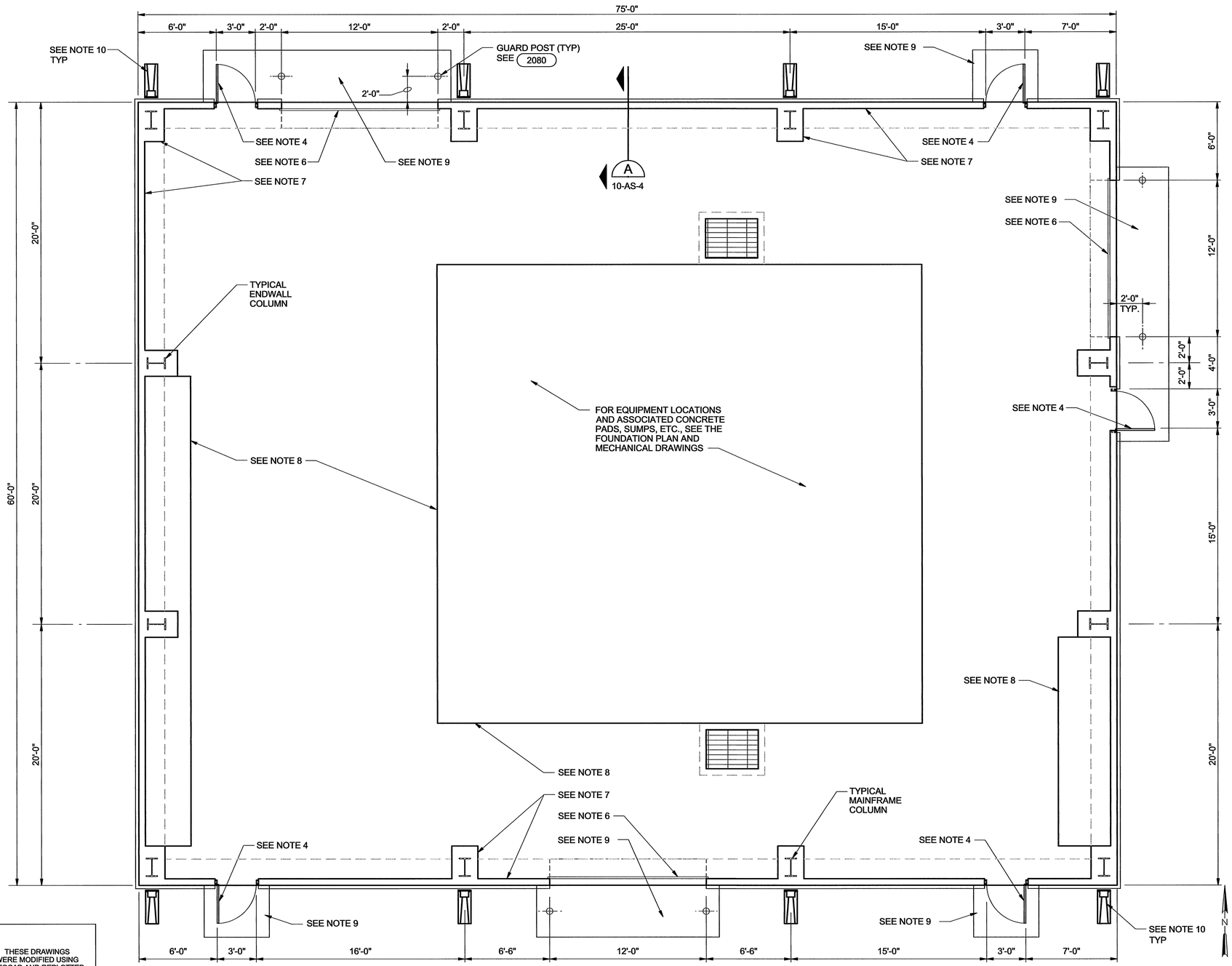

GENERAL NOTES:

1. FOR CODE COMPLIANCE DATA, GENERAL NOTES, LEGEND, AND LIFE SAFETY PLAN, SEE DRAWING 1-G-3. FOR GENERAL STRUCTURAL NOTES, SEE DRAWING 1-G-5.
2. FILTER BUILDING DESIGN IS BASED ON A PREFABRICATED METAL BUILDING WITH CLEAR-SPAN FRAMES SPACED AT 25 FT O.C., STANDARD ENDWALL COLUMNS AND FRAMING, AND A NOMINAL EAVE HEIGHT OF 16 FT. SEE SPECIFICATION SECTION 13122 "METAL BUILDING SYSTEMS"
3. INTERIOR OF METAL BUILDING WALLS AND UNDERSIDE OF METAL BUILDING ROOF SHALL RECEIVE 4-INCH THICK VINYL-FACED FIBERGLASS BATT INSULATION, AS SPECIFIED IN SECTION 13122 "METAL BUILDING SYSTEMS".
4. 3'-0" WIDE X 6'-8" HIGH INSULATED HOLLOW METAL DOOR IN HOLLOW METAL FRAME. FOR DOOR, FRAME, AND HARDWARE ATTRIBUTES, SEE SPECIFICATION SECTION 13122 "METAL BUILDING SYSTEMS" DOORS AND FRAMES SHALL BE PAINTED TO MATCH ADJACENT METAL BUILDING WALL PANELS. SEE SPECIFICATION SECTION 09900 "PAINTING AND PROTECTIVE COATINGS"
5. LOUVERS SHALL BE FURNISHED BY METAL BUILDING MANUFACTURER, AND FINISHED TO MATCH ADJACENT METAL BUILDING WALL PANELS. SEE SPECIFICATION SECTION 13122 "METAL BUILDING SYSTEMS" AND DRAWING 10-AS-3 FOR SIZES AND LOCATIONS
6. 12'-0" WIDE X 12'-0" HIGH INSULATED OVERHEAD ROLL-UP DOOR. FOR DOOR CURTAIN, FRAME, AND ASSOCIATED ATTRIBUTES, SEE SPECIFICATION SECTION 13122 "METAL BUILDING SYSTEMS". DOOR CURTAINS AND FRAMES SHALL BE PAINTED TO MATCH ADJACENT METAL BUILDING WALL PANELS.
7. CONCRETE PEDESTAL-STEMWALL WITH EXPOSED SURFACES COATED WITH PAINT SYSTEM NO.111, AS SPECIFIED IN SECTION 09900 "PAINTING AND PROTECTIVE COATINGS"
8. ALL EXPOSED SURFACES OF CONCRETE FLOOR AND EQUIPMENT CURBS SHALL BE COATED WITH PAINT SYSTEM NO.21, AS SPECIFIED IN SECTION 09900 "PAINTING AND PROTECTIVE COATINGS"
9. REINFORCED CONCRETE APRON-STOOP. SEE FOUNDATION PLAN.
10. GUTTER AND DOWNSPOUT TO PRECAST CONCRETE SPLASHBLOCK

RECORD DRAWINGS

Revisions Drawn by EJA Date 11/2007

THESE RECORD DRAWINGS HAVE BEEN PREPARED, IN PART, ON THE BASIS OF INFORMATION COMPILED BY OTHERS. THEY ARE NOT INTENDED TO REPRESENT IN DETAIL THE EXACT LOCATION, TYPE OF COMPONENT NOR MANNER OF CONSTRUCTION. THE ENGINEER WILL NOT BE RESPONSIBLE FOR ANY ERRORS OR OMISSIONS WHICH HAVE BEEN INCORPORATED INTO THE RECORD DRAWINGS.

FLOOR PLAN

1/4" = 1'-0"

THESE DRAWINGS WERE MODIFIED USING AUTOCAD AND REPLOTTED FOR RECORD PURPOSES AND THEREFORE DO NOT HAVE THE ENGINEER'S STAMP OR OTHER SIGNATURES THAT APPEAR ON THE ORIGINAL CONTRACT DRAWINGS.

DSGN	R. LECZNAR
DR	E. ARMIJO
CHK	M. NANNINGA
APVD	M.NANNINGA

NO.	DATE	REVISION	BY	APVD

VERIFY SCALE
BAR IS ONE INCH ON ORIGINAL DRAWING.
0 1"
IF NOT ONE INCH ON THIS SHEET, ADJUST SCALES ACCORDINGLY.

Sdg inc. CH2MHILL

BLOOMFIELD, NEW MEXICO
WATER TREATMENT PLANT
UPGRADE

ARCHITECTUAL / STRUCTURAL
ARCHITECTURAL
FLOOR PLAN

SHEET	20 OF 47
DWG	10-AS-1
DATE	MAY 2006
PROJ	342630

FILENAME: 10_10AS01D_342630.DWG PLOT DATE: 10-MAY-2006 PLOT TIME: 00:00:00

©CH2M HILL
THIS DOCUMENT, AND THE IDEAS AND DESIGNS INCORPORATED HEREIN, AS AN INSTRUMENT OF PROFESSIONAL SERVICE, IS THE PROPERTY OF CH2M HILL AND IS NOT TO BE USED, IN WHOLE OR IN PART, FOR ANY OTHER PROJECT WITHOUT THE WRITTEN AUTHORIZATION OF CH2MHILL.
REUSE OF DOCUMENTS:

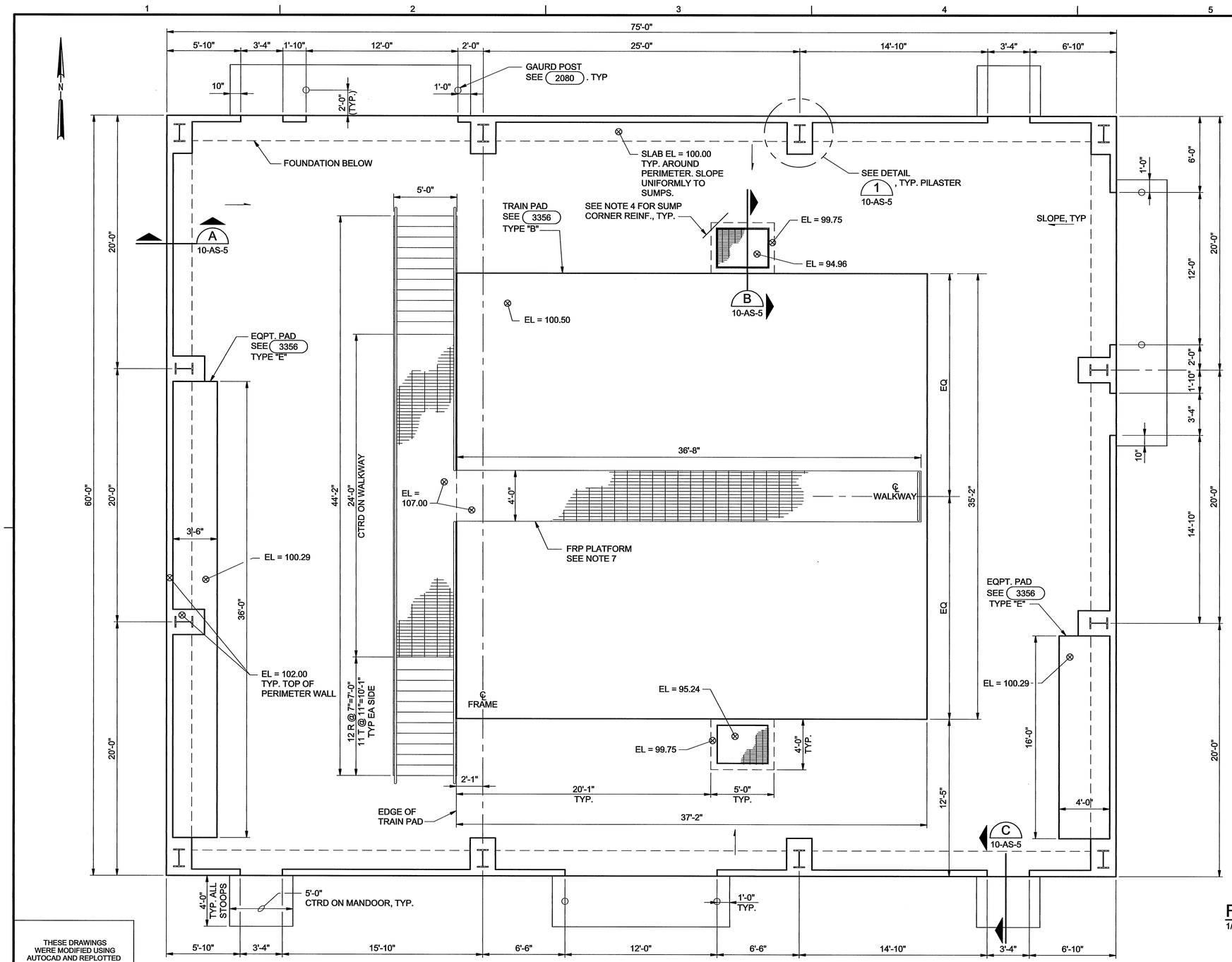

GENERAL NOTES:

1. SEE STRUCTURAL NOTES, INCLUDING METAL BUILDING NOTES, DWG. 1-G-5
2. ANCHORAGE OF EQUIPMENT SHALL BE DESIGNED AND PROVIDED BY EQUIPMENT MANUFACTURER. CALCULATIONS ARE TO BE STAMPED BY A PROFESSIONAL ENGINEER REGISTERED IN THE STATE OF NEW MEXICO.
3. COORDINATE LOCATION OF EQUIPMENT, PADS AND PIPING WITH MECHANICAL ALL PIPES UNDER SLAB TO BE CONCRETE ENCASED PER 3316 AND 3318 .
4. COORDINATE PIPE PENETRATIONS IN SLAB WITH MECHANICAL DRAWINGS. AND AT CORNERS OF SUMPS. ADD'L REINF, SEE 3301 .
5. PLAN ELEVATION 100.00 FOR THIS FACILITY CORRESPONDS TO SITE ELEVATION 5499.50.
6. REFER TO ARCHITECTURAL PLANS FOR ADDITIONAL INFORMATION.
7. REFER TO SPECIFICATION 06500, FIBERGLASS REINFORCED PLASTIC PRODUCTS FOR FRP PLATFORM, STAIRS, HANDRAIL AND GRATING. CONTRACTOR TO COODINATE PLATFORM LAYOUT REQUIREMENTS INCLUDING SIZE, HEIGHT, COLUMN LOCATIONS, ETC. W/ EQUIPMENT MANUFACTURER.
8. 1/2" DEEP SAWCUT SLAB JOINTS AT 15' O.C. MAX SPA. REINF. RUNS CONTINUOUS THRU JOINTS.
9. 3/4" CHAMFER ON ALL EXPOSED EDGES.
10. FOR EXCAVATION AND FILL WORK UNDER BUILDINGS, SEE "FOUNDATIONS" ON DWG 1-G-5.
11. ALL FOOTINGS HAVE BEEN DESIGNED FOR AN ALLOWABLE BEARING PRESSURE OF 3,000 PSF WITH AN ALLOWABLE ONE-THIRD INCREASE FOR WIND AND SEISMIC LOADS. FOUNDATIONS ARE BASED ON THE FOLLOWING MAXIMUM ASSUMED BUILDING COLUMN REACTIONS. SOME FOUNDATION CHANGES MAY BE REQUIRED BASED ON THE ACTUAL COLUMN REACTIONS THAT WILL BE PROVIDED BY THE METAL BUILDING MANUFACTURER AT SUBMITTAL OF FINAL DESIGN.

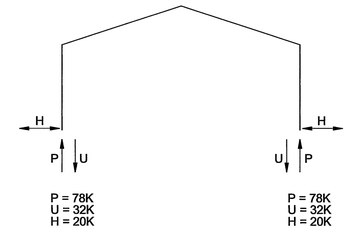

RECORD DRAWINGS

Revisions Drawn by EJA Date 11/2007

THESE RECORD DRAWINGS HAVE BEEN PREPARED, IN PART, ON THE BASIS OF INFORMATION COMPILED BY OTHERS. THEY ARE NOT INTENDED TO REPRESENT IN DETAIL THE EXACT LOCATION, TYPE OF COMPONENT NOR MANNER OF CONSTRUCTION. THE ENGINEER WILL NOT BE RESPONSIBLE FOR ANY ERRORS OR OMISSIONS WHICH HAVE BEEN INCORPORATED INTO THE RECORD DRAWINGS.

FOUNDATION PLAN

1/4" = 1'-0"

THESE DRAWINGS WERE MODIFIED USING AUTOCAD AND REPLOTTED FOR RECORD PURPOSES AND THEREFORE DO NOT HAVE THE ENGINEER'S STAMP OR OTHER SIGNATURES THAT APPEAR ON THE ORIGINAL CONTRACT DRAWINGS.

DSGN	T. PAIGE
DR	E. ARMIJO
CHK	M. NANNINGA
APVD	M. NANNINGA

NO.	DATE	REVISION	BY	APVD

VERIFY SCALE
BAR IS ONE INCH ON ORIGINAL DRAWING.
0 1"
IF NOT ONE INCH ON THIS SHEET, ADJUST SCALES ACCORDINGLY.

Sdg inc. CH2MHILL

BLOOMFIELD, NEW MEXICO
WATER TREATMENT PLANT
UPGRADE

ARCHITECTUAL / STRUCTURAL
STRUCTURAL
FOUNDATION PLAN

SHEET	21 OF 47
DWG	10-AS-2
DATE	MAY 2006
PROJ	342630

FILENAME:10_10AS02_342630.DWG PLOT DATE: 10-MAY-2006 PLOT TIME: 00:00:00

© CH2M HILL

THIS DOCUMENT, AND THE IDEAS AND DESIGNS INCORPORATED HEREIN, AS AN INSTRUMENT OF PROFESSIONAL SERVICE, IS THE PROPERTY OF CH2M HILL AND IS NOT TO BE USED, IN WHOLE OR IN PART, FOR ANY OTHER PROJECT WITHOUT THE WRITTEN AUTHORIZATION OF CH2MHILL.

REUSE OF DOCUMENTS:

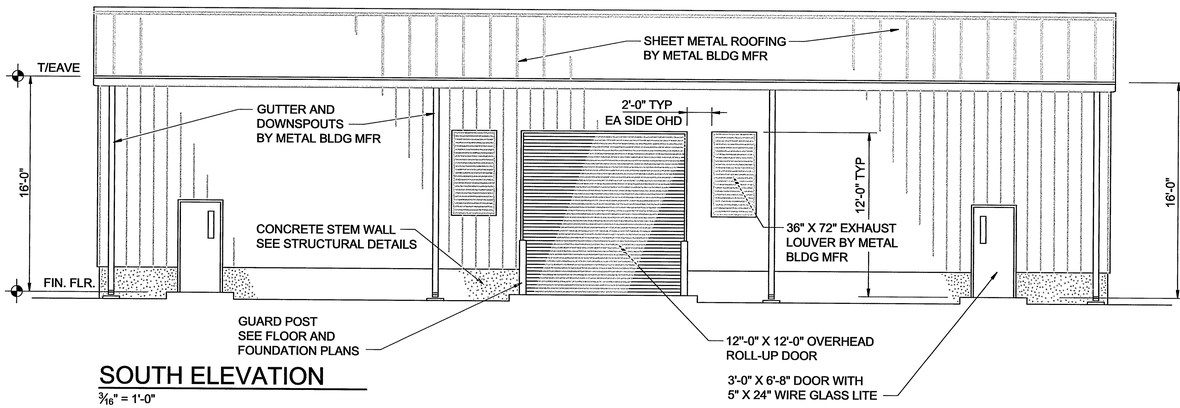

SOUTH ELEVATION

3/16" = 1'-0"

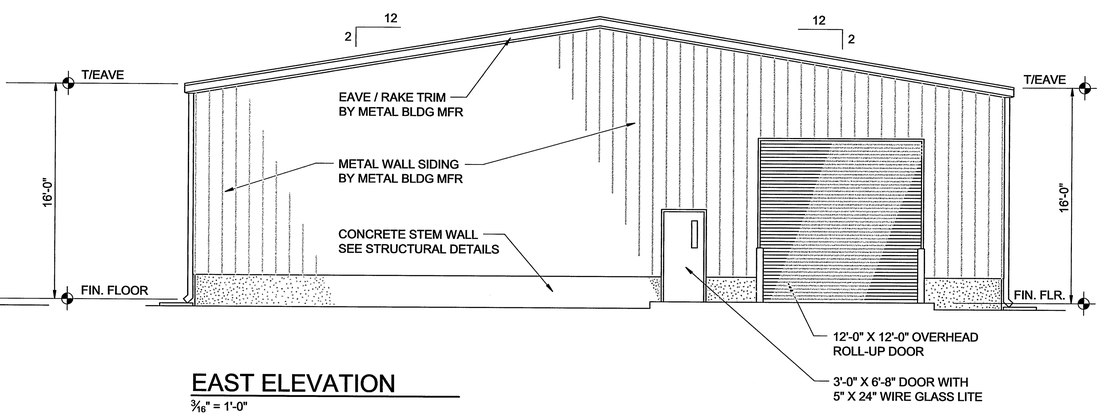

EAST ELEVATION

3/16" = 1'-0"

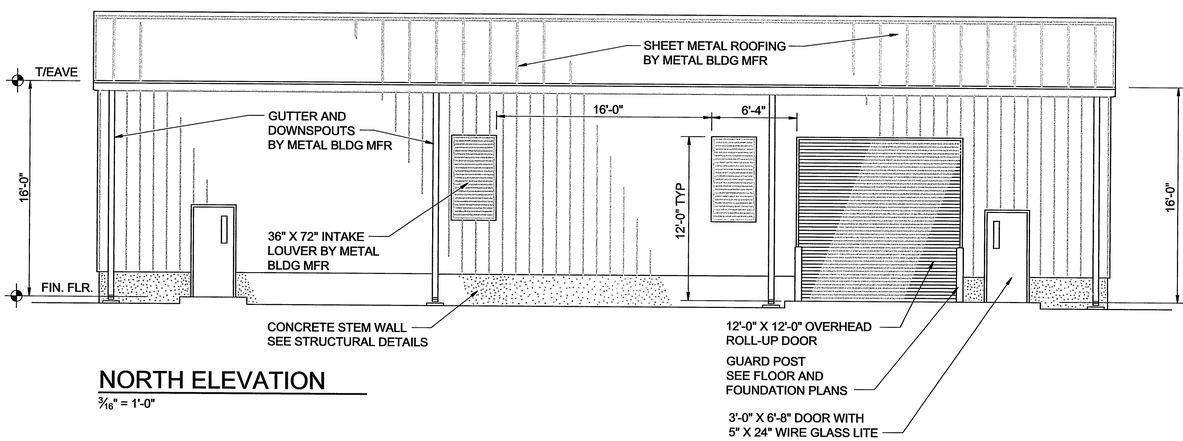

NORTH ELEVATION

3/16" = 1'-0"

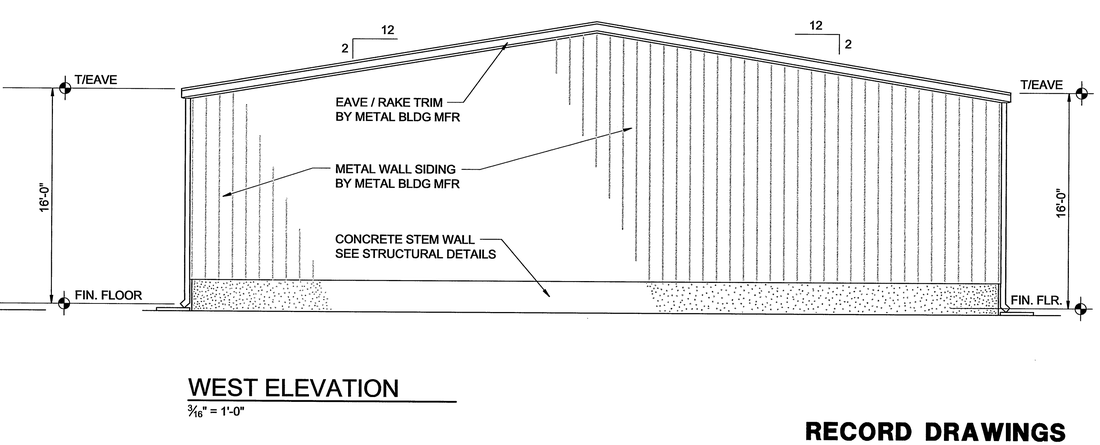

WEST ELEVATION

3/16" = 1'-0"

RECORD DRAWINGS

Revisions Drawn by EJA Date 11/2007

THESE RECORD DRAWINGS HAVE BEEN PREPARED, IN PART, ON THE BASIS OF INFORMATION COMPILED BY OTHERS. THEY ARE NOT INTENDED TO REPRESENT IN DETAIL THE EXACT LOCATION, TYPE OF COMPONENT NOR MANNER OF CONSTRUCTION. THE ENGINEER WILL NOT BE RESPONSIBLE FOR ANY ERRORS OR OMISSIONS WHICH HAVE BEEN INCORPORATED INTO THE RECORD DRAWINGS.

THESE DRAWINGS WERE MODIFIED USING AUTOCAD AND REPLOTTED FOR RECORD PURPOSES AND THEREFORE DO NOT HAVE THE ENGINEER'S STAMP OR OTHER SIGNATURES THAT APPEAR ON THE ORIGINAL CONTRACT DRAWINGS.

DSGN	R. LECZNAR
DR	E. ARMIJO
CHK	M.NANNINGA
APVD	M.NANNINGA

NO.	DATE	REVISION	BY	APVD

VERIFY SCALE
BAR IS ONE INCH ON ORIGINAL DRAWING.
0 1"
IF NOT ONE INCH ON THIS SHEET, ADJUST SCALES ACCORDINGLY.

Sdg inc. CH2MHILL

BLOOMFIELD, NEW MEXICO
WATER TREATMENT PLANT
UPGRADE

ARCHITECTUAL / STRUCTURAL
ARCHITECTURAL
EXTERIOR ELEVATIONS

SHEET	22 OF 47
DWG	10-AS-3
DATE	MAY 2006
PROJ	342630

FILENAME: 10_10AS03D_342630.dwg PLOT DATE: 01-JUNE-2006 PLOT TIME: 00:00:00

© CH2M HILL
REUSE OF DOCUMENTS: THIS DOCUMENT, AND THE IDEAS AND DESIGNS INCORPORATED HEREIN, AS AN INSTRUMENT OF PROFESSIONAL SERVICE, IS THE PROPERTY OF CH2M HILL AND IS NOT TO BE USED, IN WHOLE OR IN PART, FOR ANY OTHER PROJECT WITHOUT THE WRITTEN AUTHORIZATION OF CH2MHILL.

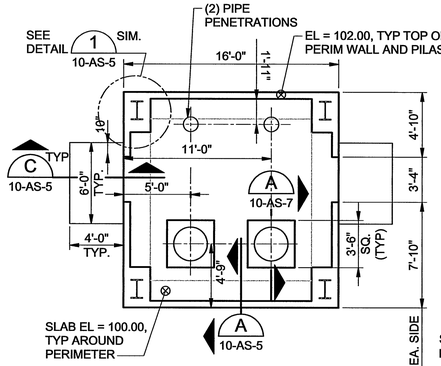

NOTES:
1. SEE NOTES ON DWG 10-AS-2.
2. PLAN ELEVATION 100.00 FOR THIS FACILITY CORRESPONDS TO SITE ELEVATION 5497.50

FOUNDATION PLAN
BACKWASH PUMP STATION
3/16" = 1'-0"

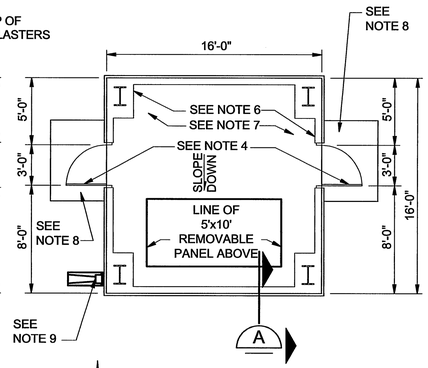

FLOOR PLAN
BACKWASH PUMP STATION
3/16" = 1'-0"

GENERAL NOTES:

1. FOR CODE COMPLIANCE DATA, GENERAL NOTES, LEGEND, AND LIFE SAFETY PLAN, SEE DRAWING 1-G-3
2. BACKWASH PUMP STATION DESIGN IS BASED ON A PREFABRICATED METAL BUILDING SYSTEM WITH A 12 FT EAVE HEIGHT. ALL DOOR AND LOUVER (HEAD, JAMB, SILL) DETAILS SHALL BE BASED ON METAL BUILDING MFR'S STANDARD DESIGN FOR A WEATHERTIGHT INSTALLATION. SEE SPECIFICATION SECTION 13122 "METAL BUILDING SYSTEMS"
3. INTERIOR OF METAL BUILDING WALLS AND UNDERSIDE OF METAL BUILDING ROOF SHALL RECEIVE 4-INCH THICK VINYL-FACED FIBERGLASS BATT INSULATION, AS SPECIFIED IN SECTION 13122 "METAL BUILDING SYSTEMS".
4. 3'-0" WIDE X 6'-8" HIGH INSULATED HOLLOW METAL DOOR IN HOLLOW METAL FRAME. FOR DOOR, FRAME, AND HARDWARE ATTRIBUTES, SEE SPECIFICATION SECTION 13122 "METAL BUILDING SYSTEMS" DOORS AND FRAMES SHALL BE PAINTED TO MATCH ADJACENT METAL BUILDING WALL PANELS. SEE SPECIFICATION SECTION 09900 "PAINTING AND PROTECTIVE COATINGS"
5. LOUVERS SHALL BE FURNISHED BY METAL BUILDING MANUFACTURER, AND FINISHED TO MATCH ADJACENT METAL BUILDING WALL PANELS. SEE SPECIFICATION SECTION 13122 "METAL BUILDING SYSTEMS" AND THIS DRAWING FOR SIZES AND LOCATIONS
6. CONCRETE PEDESTAL-STEMWALL WITH EXPOSED SURFACES COATED WITH PAINT SYSTEM NO.111, AS SPECIFIED IN SECTION 09900 "PAINTING AND PROTECTIVE COATINGS"
7. ALL EXPOSED SURFACES OF CONCRETE FLOOR AND EQUIPMENT CURBS SHALL BE COATED WITH PAINT SYSTEM NO.21, AS SPECIFIED IN SECTION 09900 "PAINTING AND PROTECTIVE COATINGS"
8. REINFORCED CONCRETE APRON-STOOP. SEE FOUNDATION PLAN
9. GUTTER AND DOWNSPOUT TO PRECAST CONCRETE SPLASHBLOCK

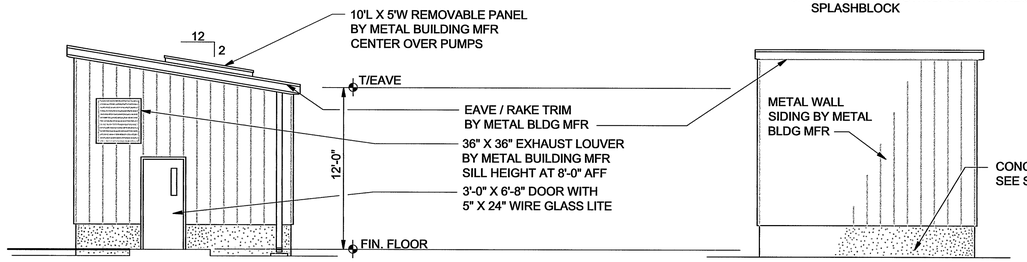

WEST ELEVATION
3/16=1'-0"

NORTH ELEVATION
3/16=1'-0"

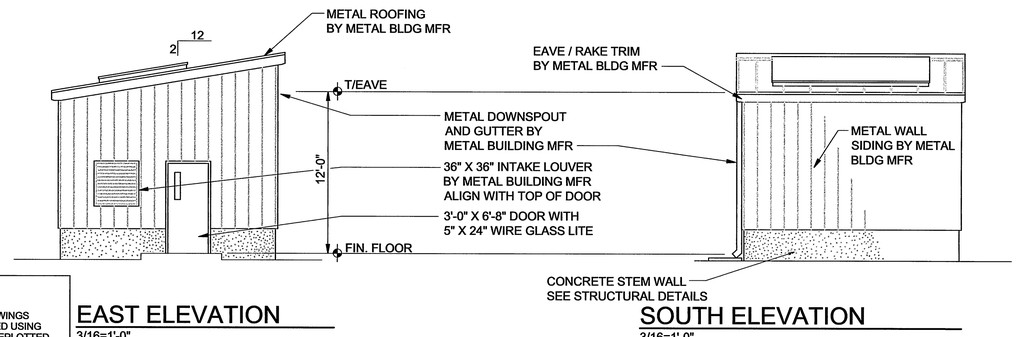

EAST ELEVATION
3/16=1'-0"

SOUTH ELEVATION
3/16=1'-0"

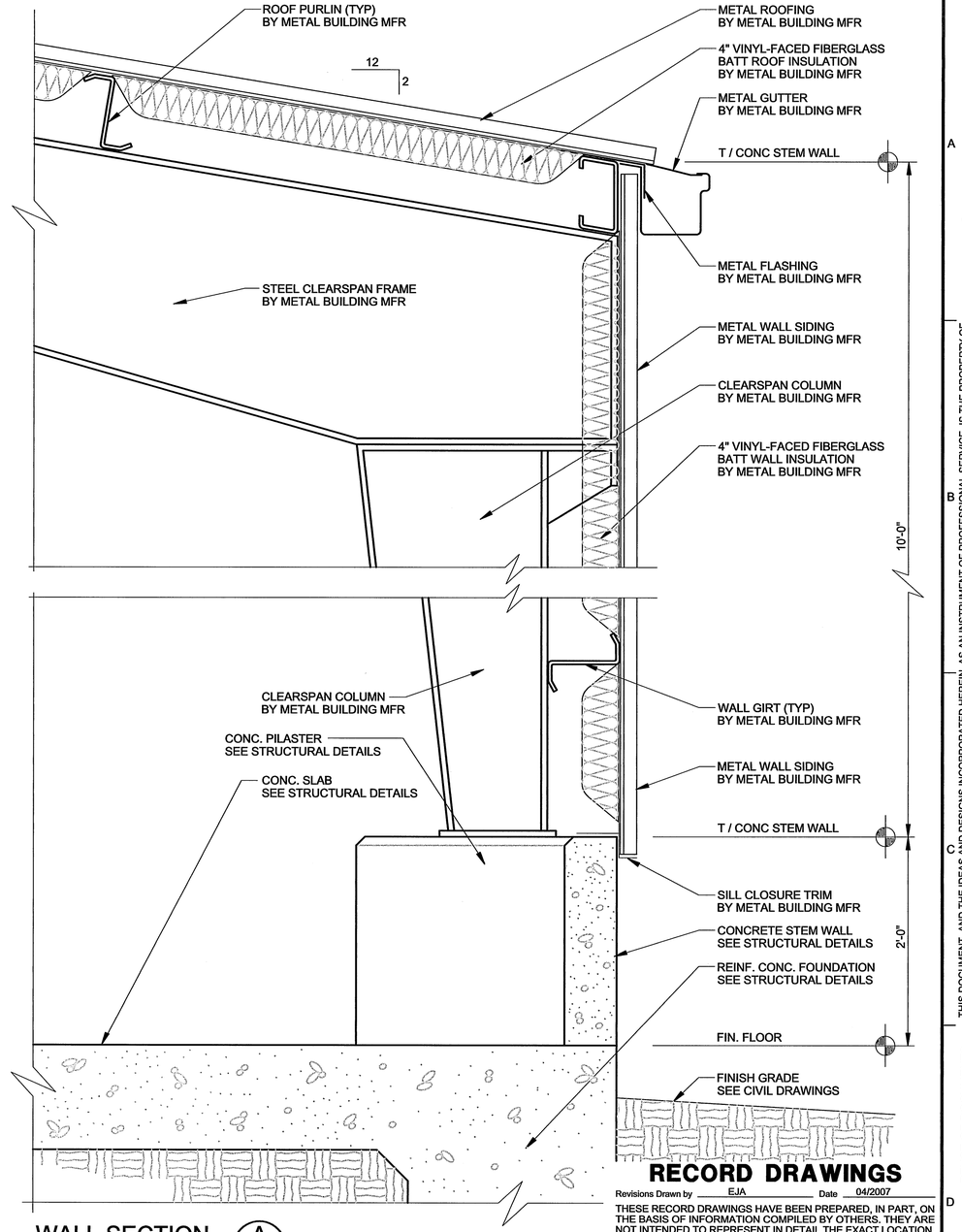

WALL SECTION A
1 ½" = 1'-0" — 10-AS-1

RECORD DRAWINGS
Revisions Drawn by EJA Date 04/2007

THESE RECORD DRAWINGS HAVE BEEN PREPARED, IN PART, ON THE BASIS OF INFORMATION COMPILED BY OTHERS. THEY ARE NOT INTENDED TO REPRESENT IN DETAIL THE EXACT LOCATION, TYPE OF COMPONENT NOR MANNER OF CONSTRUCTION. THE ENGINEER WILL NOT BE RESPONSIBLE FOR ANY ERRORS OR OMISSIONS WHICH HAVE BEEN INCORPORATED INTO THE RECORD DRAWINGS.

REUSE OF DOCUMENTS: THIS DOCUMENT, AND THE IDEAS AND DESIGNS INCORPORATED HEREIN, AS AN INSTRUMENT OF PROFESSIONAL SERVICE, IS THE PROPERTY OF CH2M HILL AND IS NOT TO BE USED, IN WHOLE OR IN PART, FOR ANY OTHER PROJECT WITHOUT THE WRITTEN AUTHORIZATION OF CH2MHILL
© CH2M HILL

THESE DRAWINGS WERE MODIFIED USING AUTOCAD AND REPLOTTED FOR RECORD PURPOSES AND THEREFORE DO NOT HAVE THE ENGINEER'S STAMP OR OTHER SIGNATURES THAT APPEAR ON THE ORIGINAL CONTRACT DRAWINGS.

DSGN	R. LECZNAR
DR	E. ARMIJO
CHK	M. NANNINGA
APVD	M.NANNINGA

NO.	DATE	REVISION	BY	APVD
1	9/5/06	REVISED PIPE PENETRATIONS, PUMP LAYOUT, AND DOOR/LOUVER LOCATIONS		
2	9/15/06	REVISED BUILDING HEIGHT		

VERIFY SCALE
BAR IS ONE INCH ON ORIGINAL DRAWING. 0 1"
IF NOT ONE INCH ON THIS SHEET, ADJUST SCALES ACCORDINGLY.

Sdg inc. CH2MHILL

BLOOMFIELD, NEW MEXICO
WATER TREATMENT PLANT
UPGRADE

ARCHITECTUAL / STRUCTURAL
BACKWASH PUMP STATION FOUNDATION PLAN / FLOOR PLAN AND ELEVATIONS TYPICAL WALL SECTION

SHEET	23 OF 47
DWG	10-AS-4
DATE	JUNE 2006
PROJ	342630

FILENAME: 10_10AS04D_342630.dwg PLOT DATE: 01-JUNE-2006 PLOT TIME: 00:00:00

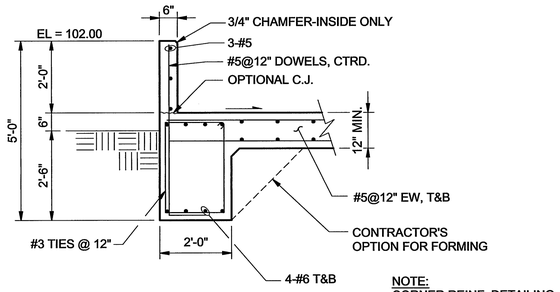

NOTE:
CORNER REINF. DETAILING
SEE (3303)

TYPICAL PERIMETER

SECTION (A)
1/2"=1'-0" 10-AS-2 10-AS-4

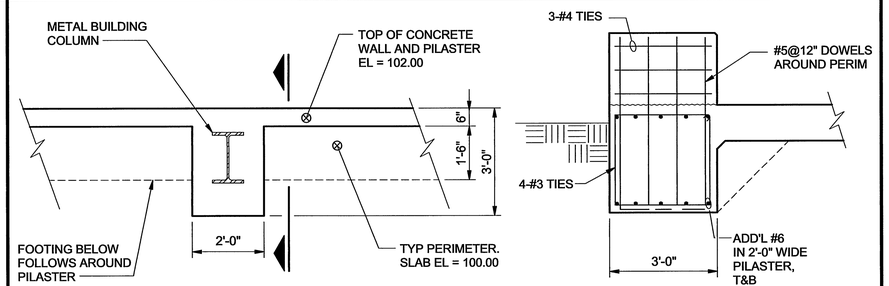

PLAN

SECTION

COLUMN PILASTER, TYP OF 12

NOTE:
FOR DIMENSIONS AND REINF NOT
SHOWN, SEE (A)

DETAIL (1)
1/2"=1'-0" 10-AS-2 10-AS-4

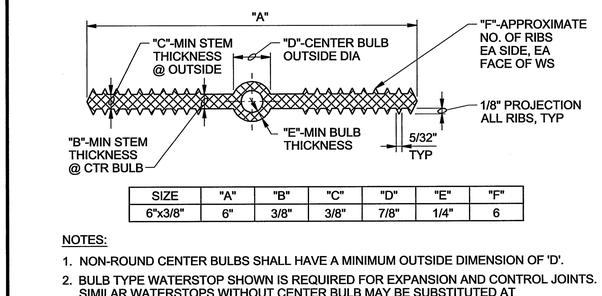

SIZE	"A"	"B"	"C"	"D"	"E"	"F"
6"x3/8"	6"	3/8"	3/8"	7/8"	1/4"	6

NOTES:

1. NON-ROUND CENTER BULBS SHALL HAVE A MINIMUM OUTSIDE DIMENSION OF 'D'.
2. BULB TYPE WATERSTOP SHOWN IS REQUIRED FOR EXPANSION AND CONTROL JOINTS. SIMILAR WATERSTOPS WITHOUT CENTER BULB MAY BE SUBSTITUTED AT CONSTRUCTION JOINTS.

PLASTIC WATERSTOP (3101)

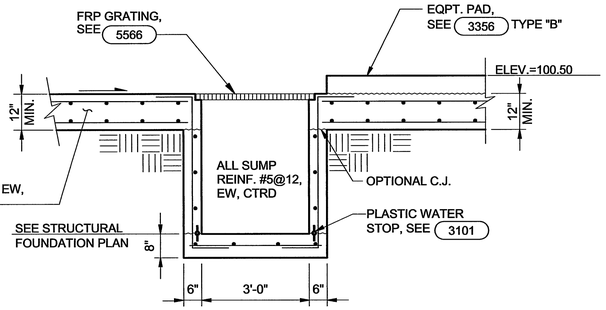

SUMP, TYP OF 2

SECTION (B)
1/2"=1'-0" 10-AS-2

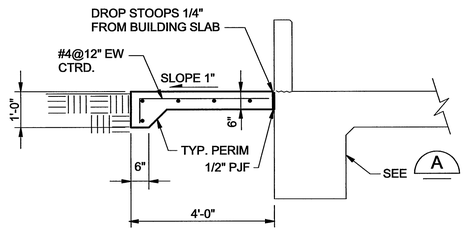

STOOP

SECTION (C)
1/2"=1'-0" 10-AS-2 10-AS-4

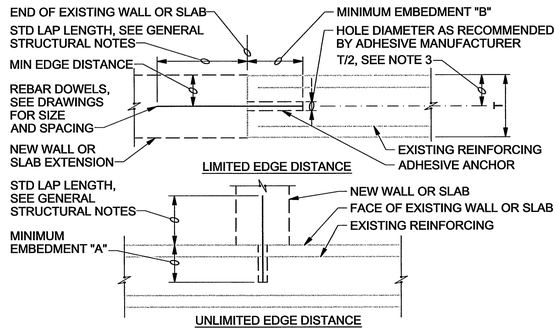

DOWEL SIZE	MINIMUM EDGE DIST	MINIMUM EMBEDMENT A	MINIMUM EMBEDMENT B
#3	2 1/2"	5"	8"
#4	3 1/2"	7"	11"
#5	4"	8"	13"
#6	5"	10 1/2"	16"
#7	6"	12 1/2"	20"
#8	7"	14"	22"
#9	7 1/2"	15"	24"

NOTES:

1. FOLLOW ADHESIVE MANUFACTURER'S INSTRUCTIONS FOR INSTALLATION.
2. USE MINIMUM EMBEDMENTS SHOWN, EXCEPT USE MANUFACTURER'S MINIMUM RECOMMENDED EMBEDMENT IF GREATER.
3. LOCATE DOWELS CENTERED IN WALL OR SLAB UNLESS OTHERWISE NOTED ON DRAWINGS. WHERE 2 ROWS OF DOWELS INDICATED, STAGGER SPACING & LOCATE ALTERNATING DOWELS AT MINIMUM EDGE DISTANCE FROM OPPOSITE FACES.

ADHESIVE DOWEL (3265)

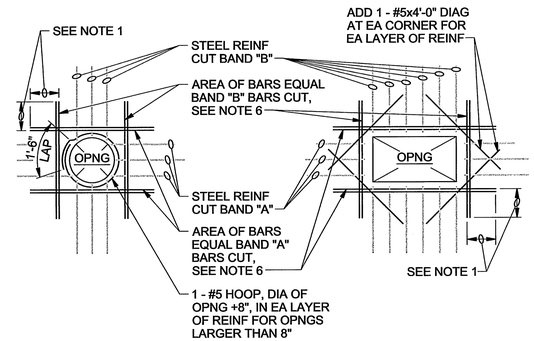

NOTES:

1. PROVIDE MINIMUM LAP, SEE GENERAL STRUCTURAL NOTES.
2. TYPICAL FOR ALL OPENINGS IN CONCRETE WALLS OR SLABS.
3. DO NOT WELD REINFORCEMENT TO PIPE SLEEVES AND INSERTS.
4. PROVIDE A MINIMUM OF 2 "A" BARS AND 2 "B" BARS EACH SIDE OF OPENING (1 EACH FACE).
5. FOR OPENINGS LARGER THAN 8'-0", REINFORCE SAME AS FOR 8'-0" OPENINGS.
6. SPACE AT 3 BAR DIAMETERS (OR 3" MINIMUM) ON CENTER.

OPENING REINFORCING (3301)

RECORD DRAWINGS

Revisions Drawn by EJA Date 11/2007

THESE RECORD DRAWINGS HAVE BEEN PREPARED, IN PART, ON THE BASIS OF INFORMATION COMPILED BY OTHERS. THEY ARE NOT INTENDED TO REPRESENT IN DETAIL THE EXACT LOCATION, TYPE OF COMPONENT NOR MANNER OF CONSTRUCTION. THE ENGINEER WILL NOT BE RESPONSIBLE FOR ANY ERRORS OR OMISSIONS WHICH HAVE BEEN INCORPORATED INTO THE RECORD DRAWINGS.

THESE DRAWINGS WERE MODIFIED USING AUTOCAD AND REPLOTTED FOR RECORD PURPOSES AND THEREFORE DO NOT HAVE THE ENGINEER'S STAMP OR OTHER SIGNATURES THAT APPEAR ON THE ORIGINAL CONTRACT DRAWINGS.

DSGN	T. PAIGE
DR	E. ARMIJO
CHK	M. NANNINGA
APVD	M. NANNINGA

NO.	DATE	REVISION	BY	APVD

VERIFY SCALE
BAR IS ONE INCH ON ORIGINAL DRAWING.
0 1"
IF NOT ONE INCH ON THIS SHEET, ADJUST SCALES ACCORDINGLY.

Sdg inc. CH2MHILL

BLOOMFIELD, NEW MEXICO
WATER TREATMENT PLANT
UPGRADE

ARCHITECTURAL / STRUCTURAL
STRUCTURAL
SECTIONS AND DETAILS

SHEET	24 OF 47
DWG	10-AS-5
DATE	MAY 2006
PROJ	342630

FILENAME:10_10S5D_342630.DWG PLOT DATE: 10-MAY-2006 PLOT TIME: 00:00:00

©CH2M HILL
THIS DOCUMENT, AND THE IDEAS AND DESIGNS INCORPORATED HEREIN, AS AN INSTRUMENT OF PROFESSIONAL SERVICE, IS THE PROPERTY OF CH2M HILL AND IS NOT TO BE USED, IN WHOLE OR IN PART, FOR ANY OTHER PROJECT WITHOUT THE WRITTEN AUTHORIZATION OF CH2MHILL.
REUSE OF DOCUMENTS:

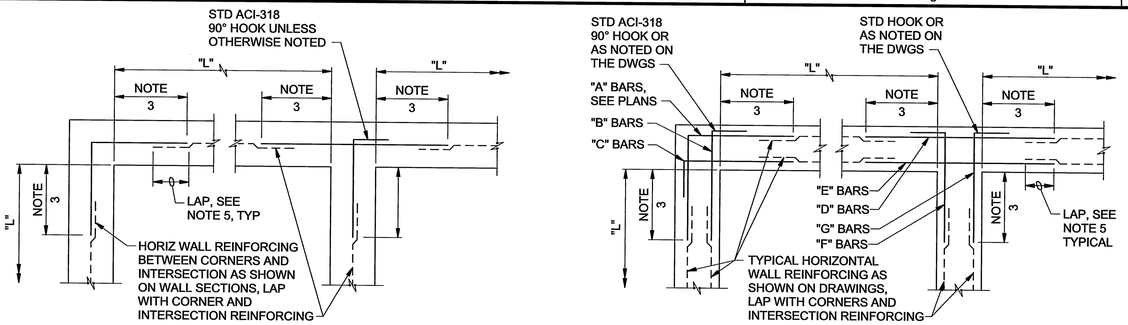

SINGLE REINFORCING MAT

DOUBLE REINFORCING MAT

NOTES:

1. TYPICAL HORIZONTAL WALL CORNER AND INTERSECTION REINFORCING LAYOUT IS SHOWN TO AVOID CONGESTION AND PERMIT PROPER PLACEMENT, FOR SIZE AND SPACING SEE PLANS. ALL HORIZONTAL REINFORCING AT CORNERS AND INTERSECTIONS SHALL BE FABRICATED AND INSTALLED WITH SPLICES LOCATED WHERE SHOWN REGARDLESS OF BAR SIZE AND SPACING.
2. WHERE THE CORNER OR INTERSECTION REINFORCING SIZE AND SPACING IS NOT SHOWN, NOTED OR TABULATED ON THE PLANS, THE SIZE AND SPACING SHALL BE THE SAME AS THE WALL HORIZONTAL REINFORCING SHOWN ON THE WALL SECTIONS OR AS NOTED FOR THE REINFORCING BETWEEN THE CORNERS OR INTERSECTIONS.
3. EXCEPT WHERE OTHERWISE SHOWN ON THE DRAWINGS, THE LENGTH INDICATED AS "NOTE 3" SHALL BE THE LESSER OF L/4, 10 FEET, OR 1.0 TIMES THE HEIGHT OF THE WALL, EXCEPT THAT IN NO CASE SHALL BE LESS THAN 2 FEET.
4. L = LENGTH OF WALL PARALLEL TO THE BAR LENGTH IN QUESTION.
5. EXCEPT WHERE OTHERWISE SHOWN ON THE DRAWINGS, THE LENGTH INDICATED AS "NOTE 5" SHALL BE EQUAL TO ONE "LAP LENGTH" AS REQUIRED BY THE GENERAL STRUCTURAL NOTES. USE THE LAP LENGTH AS REQUIRED FOR THE SMALLER OF THE TWO REINFORCING BARS BEING SPLICED.
6. UNLESS OTHERWISE NOTED, "B" AND "C" BARS ARE THE SAME SIZE AND SPACING AND, "F" AND "G" BARS ARE IN THE SAME SIZE AND SPACING.

TYPICAL WALL CORNER AND INTERSECTION REINFORCING

3303

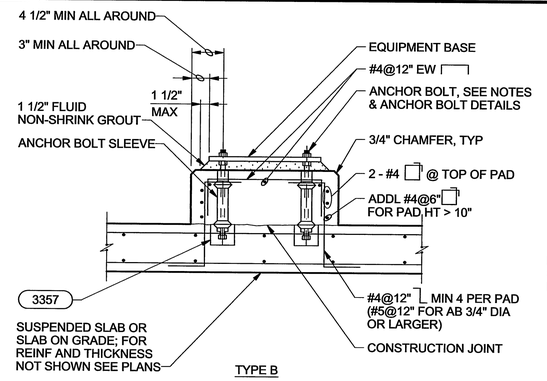

TYPE B

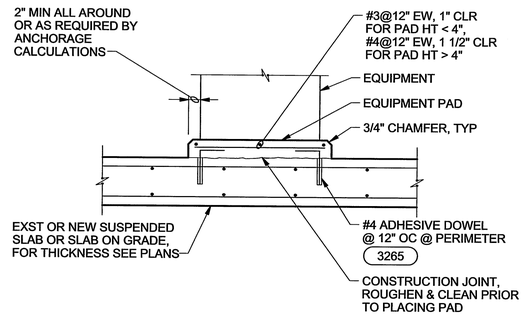

TYPE E

NOTES:

1. PAD SIZE SHALL BE MINIMUM INDICATED OR AS SHOWN ON THE PLANS OR AS INDICATED BY THE MANUFACTURER AND APPROVED BY THE ENGINEER.
2. THE SIZE, NUMBER, TYPE, LOCATION, AND THREAD PROJECTION OF THE ANCHOR BOLTS SHALL BE DETERMINED BY THE EQUIPMENT MANUFACTURER AND AS APPROVED BY THE ENGINEER. ANCHOR BOLTS SHALL BE HELD IN POSITION WITH A TEMPLATE OR OTHER ACCEPTABLE MEANS, MATCHING THE BASE PLATE, WHILE PAD IS BEING PLACED.
3. ANCHOR BOLT SLEEVES SHALL BE USED TO PROVIDE MINIMUM ANCHOR BOLT MOVEMENT OF 1/2" IN ALL HORIZONTAL DIRECTIONS. THE MINIMUM SLEEVE LENGTH SHALL BE 8 TIMES THE BOLT DIAMETER.
4. ANCHOR BOLT SLEEVES SHALL HAVE A MINIMUM INTERNAL DIAMETER 1" GREATER THAN BOLT DIAMETER AND A MAXIMUM INTERNAL DIAMETER 3" GREATER THAN ANCHOR BOLT DIAMETER. SLEEVES SHALL BE FILLED WITH NON-SHRINK GROUT AFTER BOLTS ARE ALIGNED. SEE 3357 .
5. EQUIPMENT BASES SHALL BE INSTALLED LEVEL UNLESS INDICATED OTHERWISE.
6. WEDGES, SHIMS, OR LEVELING NUTS SHALL BE USED TO SUPPORT THE BASE WHILE THE NON-SHRINK GROUT IS PLACED. WEDGES OR SHIMS THAT ARE LEFT IN PLACE SHALL NOT BE EXPOSED TO VIEW.
7. AT CONTRACTOR'S OPTION, CONCRETE ANCHORS MAY BE USED IN LIEU OF CAST-IN-PLACE ANCHOR BOLTS FOR EQUIPMENT ANCHOR BOLTS LESS THAN 3/4" DIAMETER WHEN APPROVED BY THE EQUIPMENT MANUFACTURER AND APPROVED BY THE ENGINEER. ANCHORS SHALL BE INSTALLED WITH 4" MINIMUM EDGE DISTANCE IN EACH DIRECTION.

CONCRETE EQUIPEMNT PADS

3356

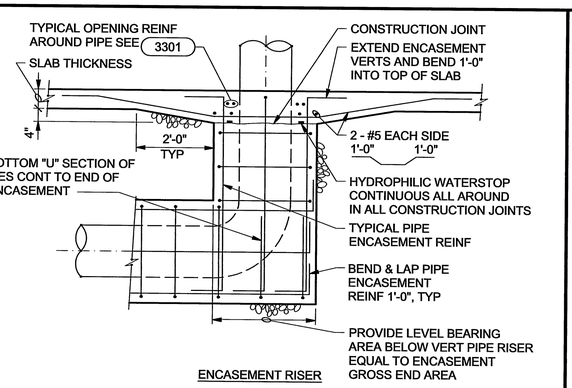

ENCASEMENT RISER

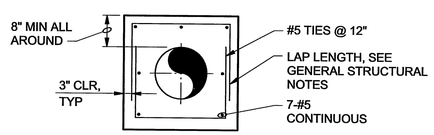

SECTION

NOTES:

1. WHEN PIPE ENCASEMENT IS CLOSER THAN 4" TO SLAB ABOVE, TIE SLAB & ENCASEMENT TOGETHER. SEE 3318

PIPE ENCASEMENT

3316

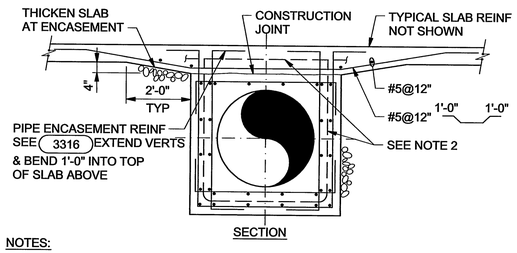

SECTION

NOTES:

1. TIE PIPE ENCASEMENT TO SLAB AS SHOWN WHEN DISTANCE BETWEEN PIPE ENCASEMENT AND BOTTOM OF SLAB IS LESS THAN 4"

PIPE ENCASEMENT AT SLAB

3318

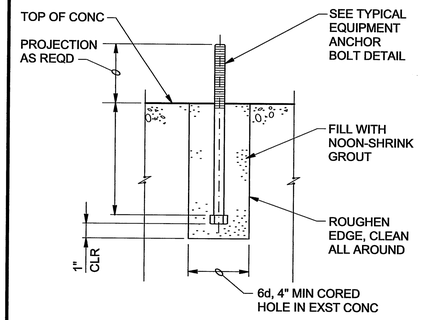

ANCHOR BOLT RETROFIT

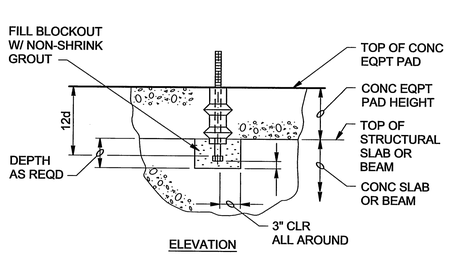

ELEVATION

ANCHOR BOLT BLOCKOUT

ANCHOR BOLT DETAILS

3357

RECORD DRAWINGS

Revisions Drawn by EJA Date 11/2007

THESE RECORD DRAWINGS HAVE BEEN PREPARED, IN PART, ON THE BASIS OF INFORMATION COMPILED BY OTHERS. THEY ARE NOT INTENDED TO REPRESENT IN DETAIL THE EXACT LOCATION, TYPE OF COMPONENT NOR MANNER OF CONSTRUCTION. THE ENGINEER WILL NOT BE RESPONSIBLE FOR ANY ERRORS OR OMISSIONS WHICH HAVE BEEN INCORPORATED INTO THE RECORD DRAWINGS.

THESE DRAWINGS WERE MODIFIED USING AUTOCAD AND REPLOTTED FOR RECORD PURPOSES AND THEREFORE DO NOT HAVE THE ENGINEER'S STAMP OR OTHER SIGNATURES THAT APPEAR ON THE ORIGINAL CONTRACT DRAWINGS.

DSGN	T. PAIGE
DR	E. ARMIJO
CHK	M. NANNINGA
APVD	M. NANNINGA

NO.	DATE	REVISION	BY	APVD

VERIFY SCALE
BAR IS ONE INCH ON ORIGINAL DRAWING. 0 1"
IF NOT ONE INCH ON THIS SHEET, ADJUST SCALES ACCORDINGLY.

Sdg inc. CH2MHILL

BLOOMFIELD, NEW MEXICO
WATER TREATMENT PLANT
UPGRADE

ARCHITECTURAL / STRUCTURAL
STRUCTURAL
SECTIONS AND DETAILS

SHEET	25 OF 47
DWG	10-AS-6
DATE	MAY 2006
PROJ	342630

FILENAME:10_10S6D_342630.DWG PLOT DATE: 10-MAY-2006 PLOT TIME: 00:00:00

©CH2M HILL
THIS DOCUMENT, AND THE IDEAS AND DESIGNS INCORPORATED HEREIN, AS AN INSTRUMENT OF PROFESSIONAL SERVICE, IS THE PROPERTY OF CH2M HILL AND IS NOT TO BE USED, IN WHOLE OR IN PART, FOR ANY OTHER PROJECT WITHOUT THE WRITTEN AUTHORIZATION OF CH2MHILL.
REUSE OF DOCUMENTS:

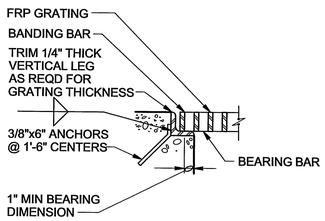

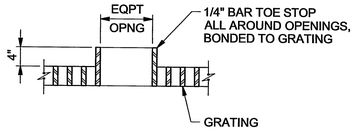

EQUIPMENT OPENINGS

GENERAL NOTES:

1. GRATING SPAN IS SHORT DIRECTION.
2. SHOP DRAWINGS SHALL BE SUBMITTED TO THE ENGINEER PRIOR TO FABRICATION.
3. METAL SUPPORTS THAT ARE TO BE EMBEDDED IN CONCRETE SHALL BE TYPE 316 STAINLESS STEEL.
4. BEARING BAR THICKNESS FOR GRATING TO BE 3/16" MINIMUM.
5. BAND ALL EDGES WITH 3/16 x DEPTH OF BEARING BAR.
6. PROVIDE MISCELLANEOUS GRATING FASTENERS AS REQUIRED.
7. THE HORIZONTAL CLEARANCE BETWEEN THE GRATING AND GRATING SUPPORTS SHALL NOT BE LESS THAN 1/4" NOR GREATER THAN 1/2" AND AS SPECIFIED.
8. REFER TO SPEC 06500, FIBERGLASS REINFORCED PLASTIC PRODUCTS

FRP GRATING

5566

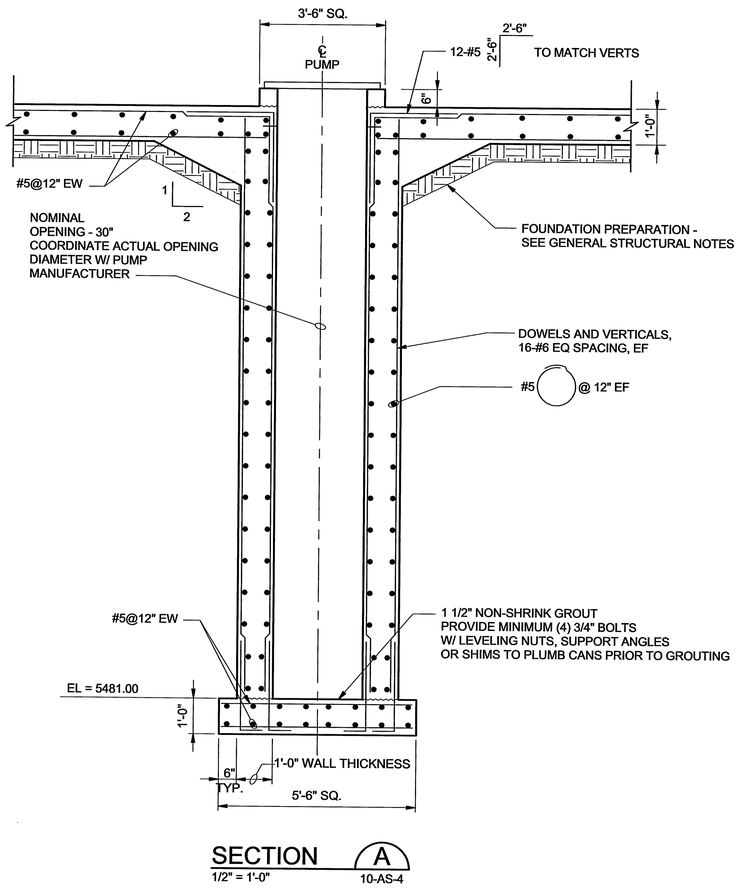

SECTION A
1/2" = 1'-0"
10-AS-4

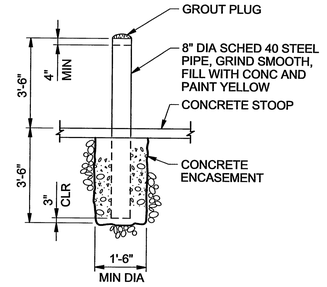

GUARD POST

2080

© CH2M HILL

THIS DOCUMENT, AND THE IDEAS AND DESIGNS INCORPORATED HEREIN, AS AN INSTRUMENT OF PROFESSIONAL SERVICE, IS THE PROPERTY OF CH2M HILL AND IS NOT TO BE USED, IN WHOLE OR IN PART, FOR ANY OTHER PROJECT WITHOUT THE WRITTEN AUTHORIZATION OF CH2MHILL.

REUSE OF DOCUMENTS:

RECORD DRAWINGS

Revisions Drawn by EJA Date 11/2007

THESE RECORD DRAWINGS HAVE BEEN PREPARED, IN PART, ON THE BASIS OF INFORMATION COMPILED BY OTHERS. THEY ARE NOT INTENDED TO REPRESENT IN DETAIL THE EXACT LOCATION, TYPE OF COMPONENT NOR MANNER OF CONSTRUCTION. THE ENGINEER WILL NOT BE RESPONSIBLE FOR ANY ERRORS OR OMISSIONS WHICH HAVE BEEN INCORPORATED INTO THE RECORD DRAWINGS.

THESE DRAWINGS WERE MODIFIED USING AUTOCAD AND REPLOTTED FOR RECORD PURPOSES AND THEREFORE DO NOT HAVE THE ENGINEER'S STAMP OR OTHER SIGNATURES THAT APPEAR ON THE ORIGINAL CONTRACT DRAWINGS.

DSGN	T. PAIGE
DR	E. ARMIJO
CHK	M. NANNINGA
APVD	M. NANNINGA

NO.	DATE	REVISION	BY	APVD

VERIFY SCALE
BAR IS ONE INCH ON ORIGINAL DRAWING.
0 1"
IF NOT ONE INCH ON THIS SHEET, ADJUST SCALES ACCORDINGLY.

Sdg inc. CH2MHILL

BLOOMFIELD, NEW MEXICO
WATER TREATMENT PLANT UPGRADE

ARCHITECTURAL / STRUCTURAL
STRUCTURAL
SECTIONS AND DETAILS

SHEET	26 OF 47
DWG	10-AS-7
DATE	MAY 2006
PROJ	342630

FILENAME:10_10S7D_342630.DWG PLOT DATE: 10-MAY-2006 PLOT TIME: 00:00:00

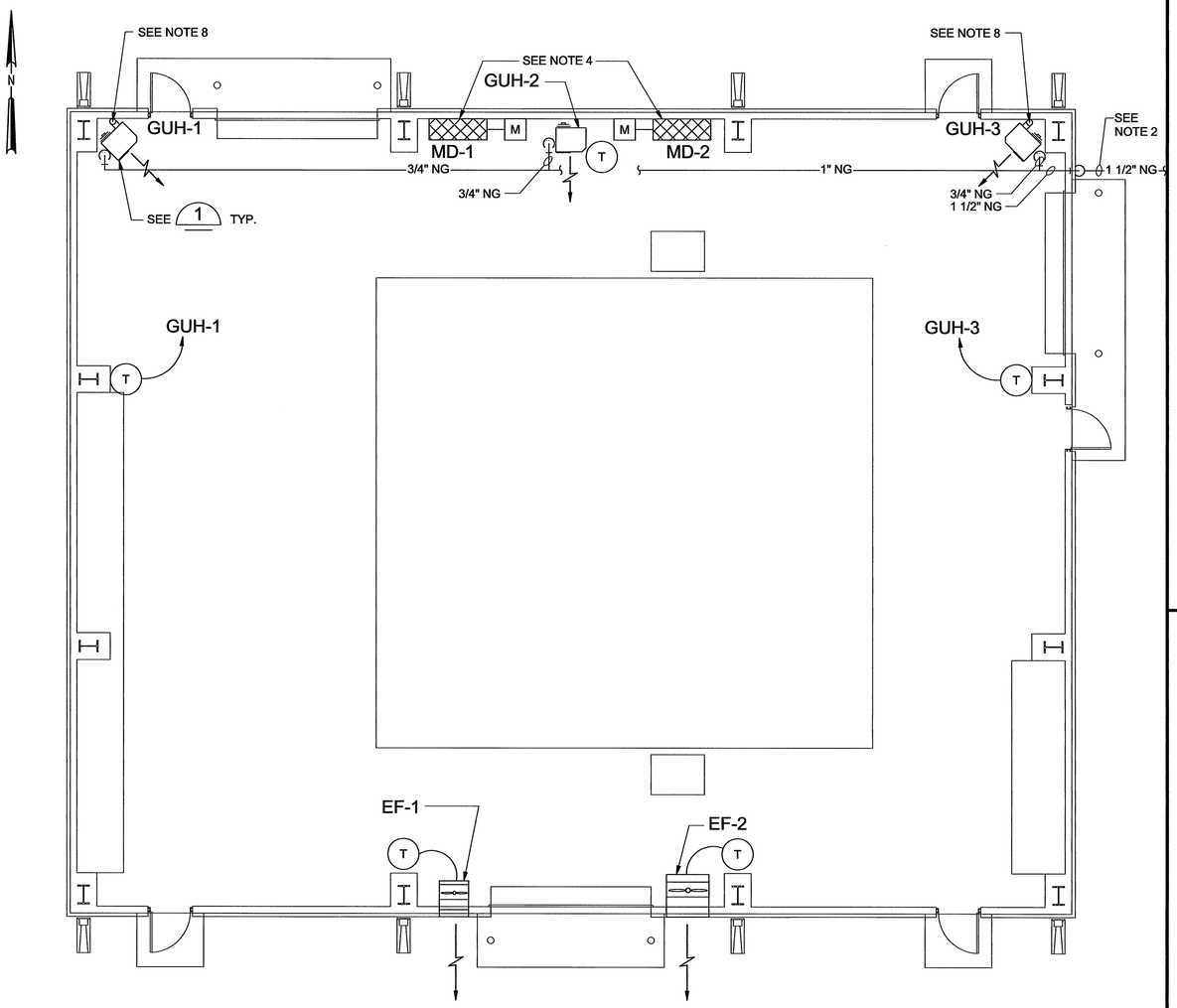

HVAC FLOOR PLAN OF TREATMENT BUILING

3/16"=1'-0"

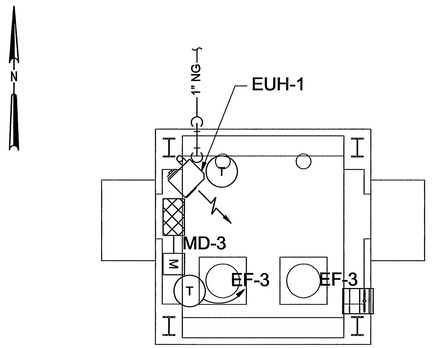

HVAC FLOOR PLAN OF BOOSTER PUMP STATION

3/16"=1'-0"

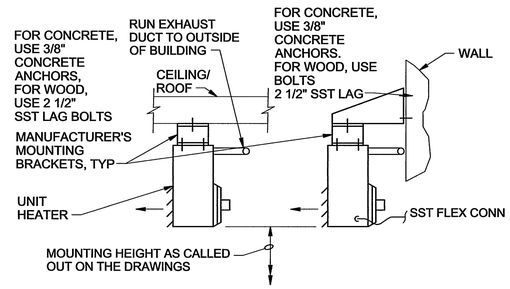

NOTES:

1. USE THREADED HANGER RODS ONLY WHERE MANUFACTURER'S MOUNTING BRACKETS ARE NOT PRACTICAL.
2. USE MANUFACTURER RECOMENDED CLEARENCES WHEN INSTALLING UNIT HEATER.
3. USE MANUFACTURER RECOMENDED DUCT SIZE FOR INSTALLING EXHAUST DUCT.

GAS FIRED UNIT HEATER (1)

N.T.S.

GENERAL NOTES:

1, SEE ARCHITECTURAL SHEETS FOR LOCATIONS OF LOUVERS.

2. NATURAL GAS LINE SEE YARD PIPING PLAN (5-C-4) FOR CONTINUATION.

3. N O T USED

4. MOTORIZED DAMPER (MD) TO EQUAL LOUVER OPENING.

5. EF-1, EF-2 AND THEIR RESPECTIVE MD ARE ELECTRICALLY INTER-LOCKED. EF-1 AND EF-2 ARE CONTROLLED FROM THEIR RESPECTIVE ON-OFF-AUTO SWITCH. IN THE AUTO POSITION EF-1,2 ARE ENERGIZED AND THEIR RESPECTIVE NORMALLY CLOSED MD OPEN ON A SPACE TEMPERATURE ABOVE THE SETTING OF THE ROOM THERMOSTAT.

6. EF-3 AND ITS RESPECTIVE MD ARE ELECTRICALLY INTERLOCKED. EF-3 IS CONTROLLED BY AN ON-OFF-AUTO SWITCH. IN THE AUTO POSITION EF-3 IS ENERGIZED AND ITS RESPECTIVE NORMALLY CLOSED MD OPEN ON A SPACE TEMPERATURE ABOVE THE SETTING OF THE ROOM THERMOSTAT.

7. GAS FIRED UNIT HEATERS ARE CONTROLED BY A REMOTE MOUNTED THERMOSTAT SET TO MAINTAIN 55° F (ADJUSTABLE).

8. 4" GAS VENT UP THROUGH ROOFS, PER MANUFACTURERS RECOMMENDATIONS. TYP.

EQUIPMENT NOTES:

EF-1 UNIT TO BE GREENHECK MODEL SE2-16-430-A5 OR EQUAL WITH WALL HOUSING AND DISCONNECT. PREFORMANCE DATA: 2,900 cfm; 0.23" SP; 1/2" HP MOTOR; 480/60/3.

EF-2 UNIT TO BE GREENHECK MODEL SEZ-48-410-C20 OR EQUAL WITH WALL HOUSING AND DISCONNECT. PREFORMANCE DATA: 17,640 cfm; 0.3" SP; 2 HP MOTOR; 460/60/3.

EF-3 UNIT TO BE GREENHECK MODEL SEZ-16-427-B6 OR EQUAL WITH WALL HOUSING AND DISCONNECT. PREFORMANCE DATA: 1,145 cfm; 0.2" SP; 1/6 HP; 115/60/1.

GUH- 1,2,3: UNITS TO VE REZNOR MODEL UDAP-30 OR EQUAL. PREFORMANCE DATA: 456 cfm; 0.02 HP FAN MOTOR; 30 MBH INPUT.

EUH-1 UNIT TO BE CHROMALOX MODEL LUH-10-43-32 OR EQUAL MOUNTED APPROXIMATELY 8-FEET ABOVE FINISHED FLOOR. PREFORMANCE DATA; 850 cfm; 1/15 HP; 480V / 3 PHASE; 10 kw HEATER.

RECORD DRAWINGS

Revisions Drawn by EJA Date 04/2007

THESE RECORD DRAWINGS HAVE BEEN PREPARED, IN PART, ON THE BASIS OF INFORMATION COMPILED BY OTHERS. THEY ARE NOT INTENDED TO REPRESENT IN DETAIL THE EXACT LOCATION, TYPE OF COMPONENT NOR MANNER OF CONSTRUCTION. THE ENGINEER WILL NOT BE RESPONSIBLE FOR ANY ERRORS OR OMISSIONS WHICH HAVE BEEN INCORPORATED INTO THE RECORD DRAWINGS.

THESE DRAWINGS WERE MODIFIED USING AUTOCAD AND REPLOTTED FOR RECORD PURPOSES AND THEREFORE DO NOT HAVE THE ENGINEER'S STAMP OR OTHER SIGNATURES THAT APPEAR ON THE ORIGINAL CONTRACT DRAWINGS.

DSGN	W. EVANS
DR	E. ARMIJO
CHK	M. NANNINGA
APVD	M. NANNINGA

NO.	DATE	REVISION	BY	APVD

VERIFY SCALE

BAR IS ONE INCH ON ORIGINAL DRAWING. 0 1"

IF NOT ONE INCH ON THIS SHEET, ADJUST SCALES ACCORDINGLY.

Sdg inc. CH2MHILL

BLOOMFIELD, NEW MEXICO
WATER TREATMENT PLANT
UPGRADE

HVAC
HVAC FLOOR PLANS OF TREATMENT BUILDING AND BOOSTER PUMP STATION

SHEET	27 OF 47
DWG	10-HV-1
DATE	JUNE 2006
PROJ	342630

FILENAME: 10-5_105HV01D_342630.DWG PLOT DATE: 10-MAY-2006 PLOT TIME: 00:00:00

© CH2M HILL

THIS DOCUMENT, AND THE IDEAS AND DESIGNS INCORPORATED HEREIN, AS AN INSTRUMENT OF PROFESSIONAL SERVICE, IS THE PROPERTY OF CH2M HILL AND IS NOT TO BE USED, IN WHOLE OR IN PART, FOR ANY OTHER PROJECT WITHOUT THE WRITTEN AUTHORIZATION OF CH2M HILL.

REUSE OF DOCUMENTS:

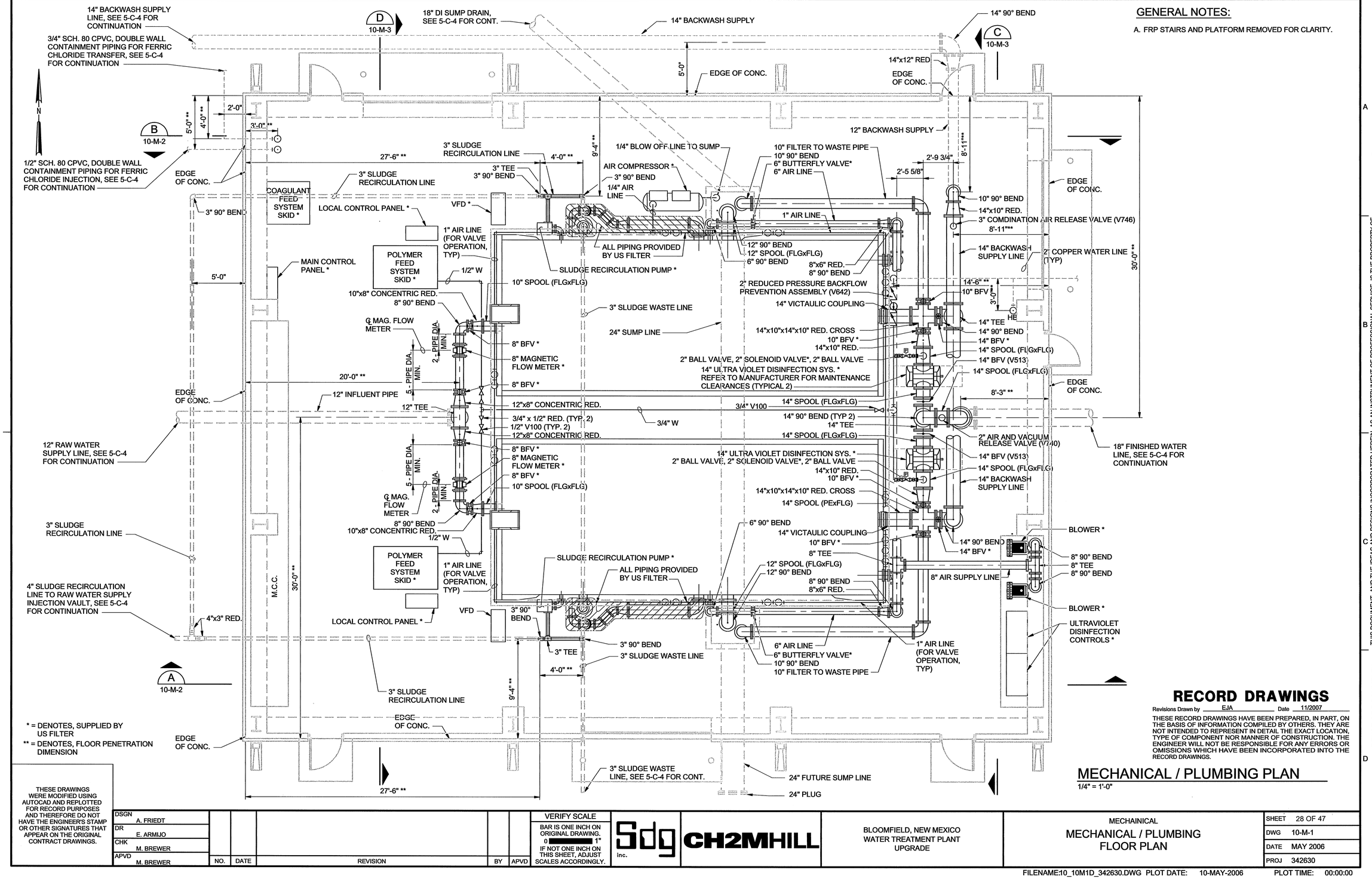

GENERAL NOTES:

A. FRP STAIRS AND PLATFORM REMOVED FOR CLARITY.

* = DENOTES, SUPPLIED BY US FILTER

** = DENOTES, FLOOR PENETRATION DIMENSION

RECORD DRAWINGS

Revisions Drawn by EJA Date 11/2007

THESE RECORD DRAWINGS HAVE BEEN PREPARED, IN PART, ON THE BASIS OF INFORMATION COMPILED BY OTHERS. THEY ARE NOT INTENDED TO REPRESENT IN DETAIL THE EXACT LOCATION, TYPE OF COMPONENT NOR MANNER OF CONSTRUCTION. THE ENGINEER WILL NOT BE RESPONSIBLE FOR ANY ERRORS OR OMISSIONS WHICH HAVE BEEN INCORPORATED INTO THE RECORD DRAWINGS.

MECHANICAL / PLUMBING PLAN

1/4" = 1'-0"

THESE DRAWINGS WERE MODIFIED USING AUTOCAD AND REPLOTTED FOR RECORD PURPOSES AND THEREFORE DO NOT HAVE THE ENGINEER'S STAMP OR OTHER SIGNATURES THAT APPEAR ON THE ORIGINAL CONTRACT DRAWINGS.

DSGN	A. FRIEDT
DR	E. ARMIJO
CHK	M. BREWER
APVD	M. BREWER

NO.	DATE	REVISION	BY	APVD

VERIFY SCALE

BAR IS ONE INCH ON ORIGINAL DRAWING. 0 1"

IF NOT ONE INCH ON THIS SHEET, ADJUST SCALES ACCORDINGLY.

Sdg inc. CH2MHILL

BLOOMFIELD, NEW MEXICO
WATER TREATMENT PLANT
UPGRADE

MECHAINICAL
MECHANICAL / PLUMBING
FLOOR PLAN

SHEET	28 OF 47
DWG	10-M-1
DATE	MAY 2006
PROJ	342630

FILENAME:10_10M1D_342630.DWG PLOT DATE: 10-MAY-2006 PLOT TIME: 00:00:00

©CH2M HILL
THIS DOCUMENT, AND THE IDEAS AND DESIGNS INCORPORATED HEREIN, AS AN INSTRUMENT OF PROFESSIONAL SERVICE, IS THE PROPERTY OF CH2M HILL AND IS NOT TO BE USED, IN WHOLE OR IN PART, FOR ANY OTHER PROJECT WITHOUT THE WRITTEN AUTHORIZATION OF CH2MHILL.
REUSE OF DOCUMENTS:

GENERAL NOTES:

A. METAL BUILDING REMOVED FOR CLARITY.

B. VDF'S AND LOCAL CONTROL PANEL'S NOT SHOWN, REFER TO 10-M-1 FOR LOCATIONS.

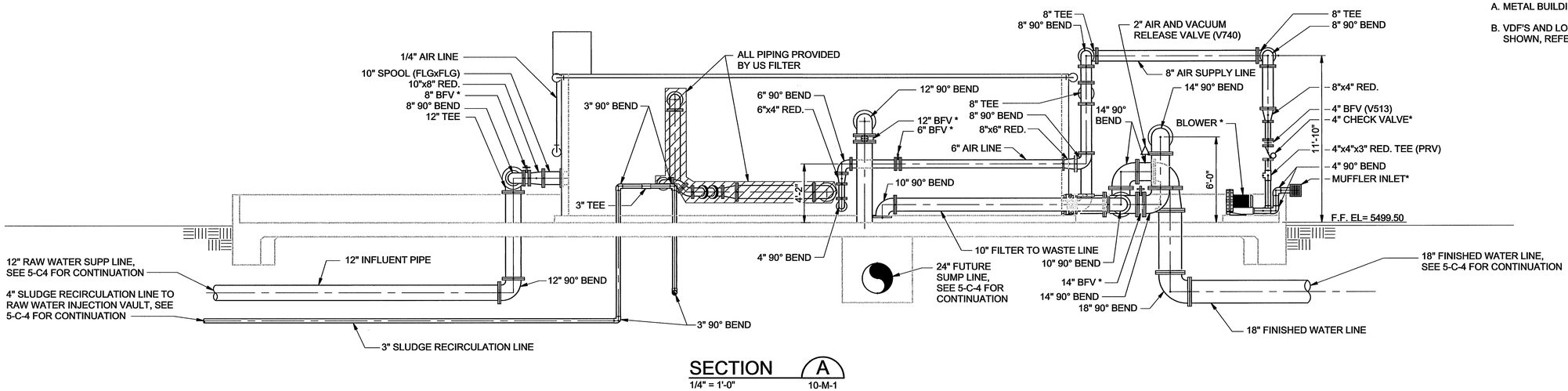

SECTION A
1/4" = 1'-0" 10-M-1

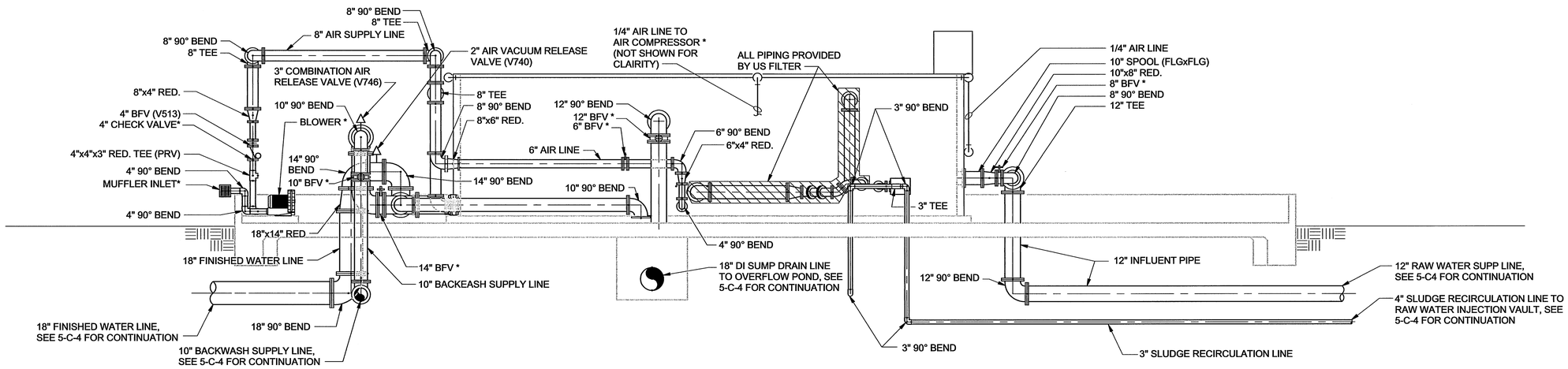

SECTION B
1/4" = 1'-0" 10-M-1

RECORD DRAWINGS

Revisions Drawn by EJA Date 11/2007

THESE RECORD DRAWINGS HAVE BEEN PREPARED, IN PART, ON THE BASIS OF INFORMATION COMPILED BY OTHERS. THEY ARE NOT INTENDED TO REPRESENT IN DETAIL THE EXACT LOCATION, TYPE OF COMPONENT NOR MANNER OF CONSTRUCTION. THE ENGINEER WILL NOT BE RESPONSIBLE FOR ANY ERRORS OR OMISSIONS WHICH HAVE BEEN INCORPORATED INTO THE RECORD DRAWINGS.

THESE DRAWINGS WERE MODIFIED USING AUTOCAD AND REPLOTTED FOR RECORD PURPOSES AND THEREFORE DO NOT HAVE THE ENGINEER'S STAMP OR OTHER SIGNATURES THAT APPEAR ON THE ORIGINAL CONTRACT DRAWINGS.

DSGN	A. FRIEDT
DR	E. ARMIJO
CHK	M. BREWER
APVD	M. BREWER

NO.	DATE	REVISION	BY	APVD

VERIFY SCALE
BAR IS ONE INCH ON ORIGINAL DRAWING. 0 1"
IF NOT ONE INCH ON THIS SHEET, ADJUST SCALES ACCORDINGLY.

Sdg inc. CH2MHILL

BLOOMFIELD, NEW MEXICO
WATER TREATMENT PLANT
UPGRADE

MECHAINICAL
MECHANICAL / PLUMBING SECTIONS

SHEET	29 OF 47
DWG	10-M-2
DATE	MAY 2006
PROJ	342630

FILENAME:10_10M2D_342630.DWG PLOT DATE: 10-MAY-2006 PLOT TIME: 00:00:00

THIS DOCUMENT, AND THE IDEAS AND DESIGNS INCORPORATED HEREIN, AS AN INSTRUMENT OF PROFESSIONAL SERVICE, IS THE PROPERTY OF CH2M HILL AND IS NOT TO BE USED, IN WHOLE OR IN PART, FOR ANY OTHER PROJECT WITHOUT THE WRITTEN AUTHORIZATION OF CH2MHILL.

© CH2M HILL

REUSE OF DOCUMENTS:

GENERAL NOTES:

A. FRP STAIRS AND PLATFORM REMOVED FOR CLAIRITY.

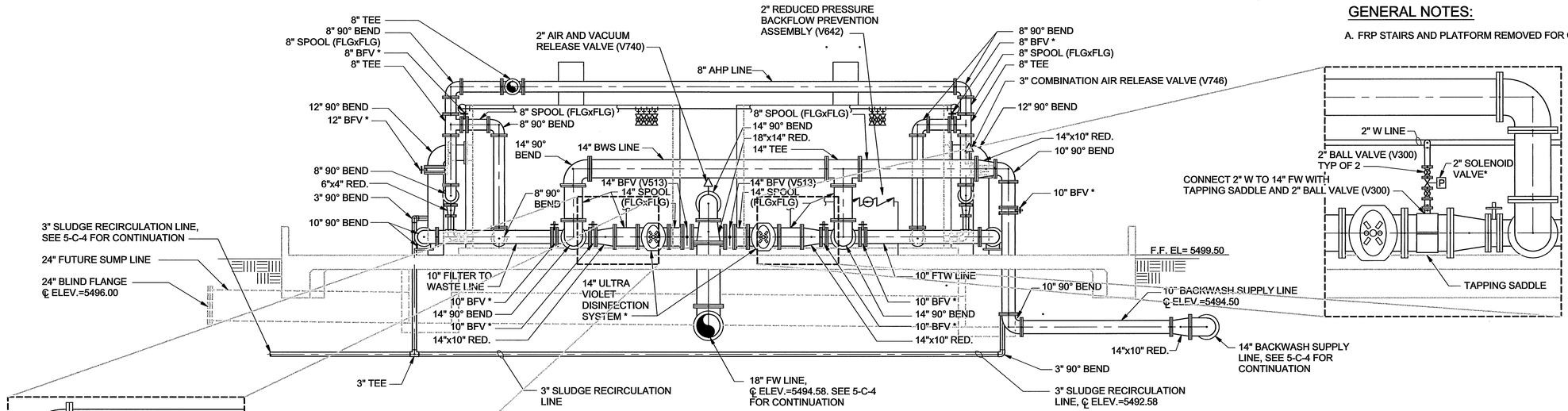

SECTION C

1/4" = 1'-0"

* = DENOTES, SUPPLIED BY US FILTER

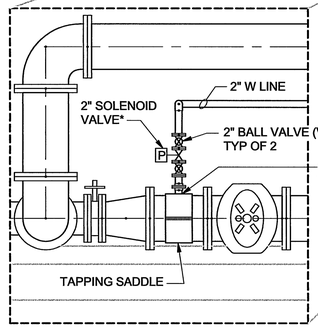

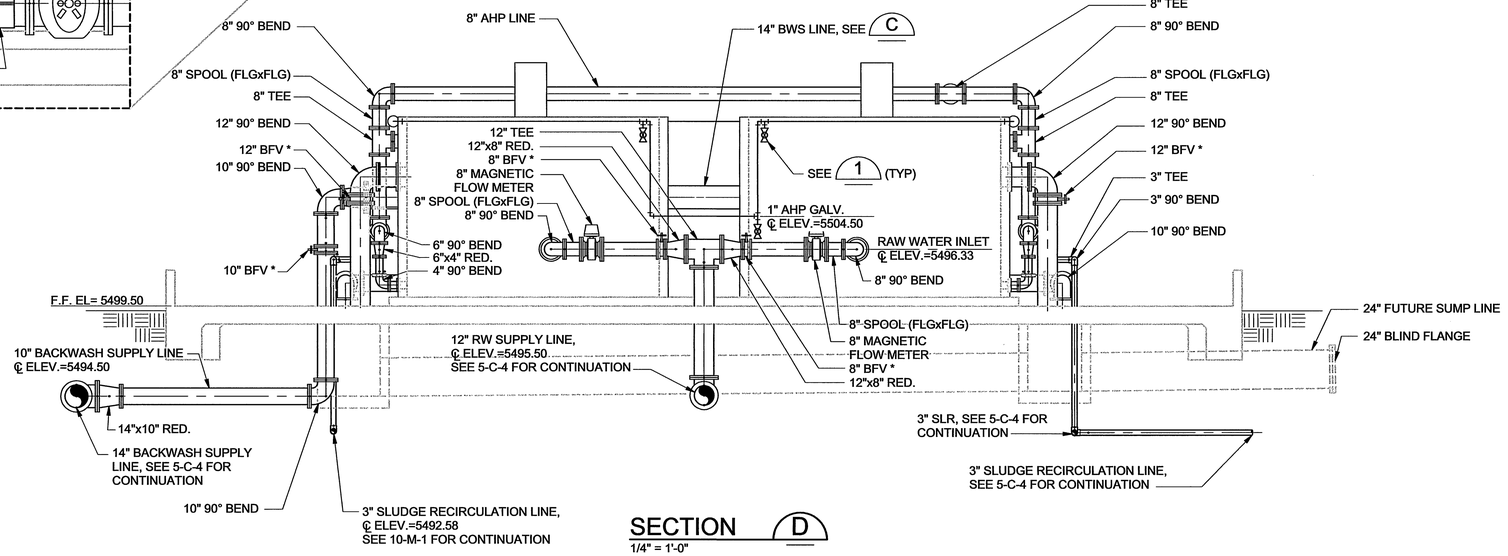

SECTION D

1/4" = 1'-0"

* = DENOTES, SUPPLIED BY US FILTER

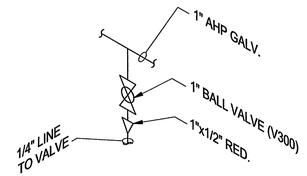

DETAIL 1

N.T.S.

RECORD DRAWINGS

Revisions Drawn by EJA Date 11/2007

THESE RECORD DRAWINGS HAVE BEEN PREPARED, IN PART, ON THE BASIS OF INFORMATION COMPILED BY OTHERS. THEY ARE NOT INTENDED TO REPRESENT IN DETAIL THE EXACT LOCATION, TYPE OF COMPONENT NOR MANNER OF CONSTRUCTION. THE ENGINEER WILL NOT BE RESPONSIBLE FOR ANY ERRORS OR OMISSIONS WHICH HAVE BEEN INCORPORATED INTO THE RECORD DRAWINGS.

THIS DOCUMENT, AND THE IDEAS AND DESIGNS INCORPORATED HEREIN, AS AN INSTRUMENT OF PROFESSIONAL SERVICE, IS THE PROPERTY OF CH2M HILL AND IS NOT TO BE USED, IN WHOLE OR IN PART, FOR ANY OTHER PROJECT WITHOUT THE WRITTEN AUTHORIZATION OF CH2MHILL.

© CH2M HILL

REUSE OF DOCUMENTS:

THESE DRAWINGS WERE MODIFIED USING AUTOCAD AND REPLOTTED FOR RECORD PURPOSES AND THEREFORE DO NOT HAVE THE ENGINEER'S STAMP OR OTHER SIGNATURES THAT APPEAR ON THE ORIGINAL CONTRACT DRAWINGS.

DSGN	A. FRIEDT
DR	E. ARMIJO
CHK	M. BREWER
APVD	M. BREWER

NO.	DATE	REVISION	BY	APVD

VERIFY SCALE

BAR IS ONE INCH ON ORIGINAL DRAWING. 0 1"

IF NOT ONE INCH ON THIS SHEET, ADJUST SCALES ACCORDINGLY.

Sdg inc. CH2MHILL

BLOOMFIELD, NEW MEXICO
WATER TREATMENT PLANT
UPGRADE

MECHAINICAL

MECHANICAL / PLUMBING SECTIONS

SHEET	30 OF 47
DWG	10-M-3
DATE	MAY 2006
PROJ	342630

FILENAME:10_10M3D_342630.DWG PLOT DATE: 10-MAY-2006 PLOT TIME: 00:00:00

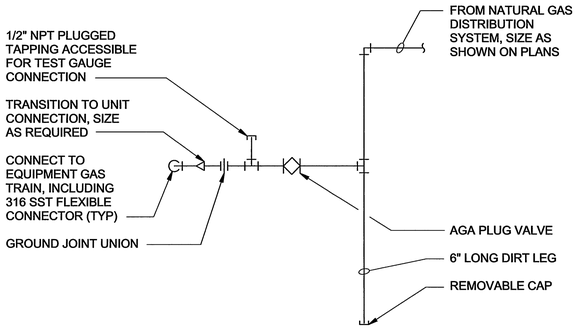

GAS FIRED EQUIPMENT CONNECTION 1

NTS

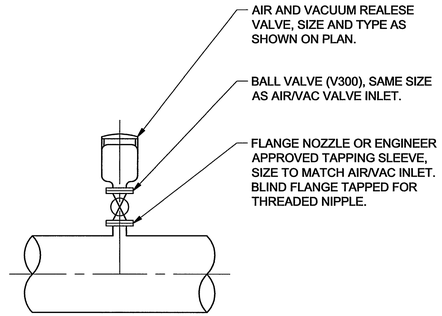

AIR AND VACUUM RELEASE VALVE DETAIL 2

NTS 10-M-1

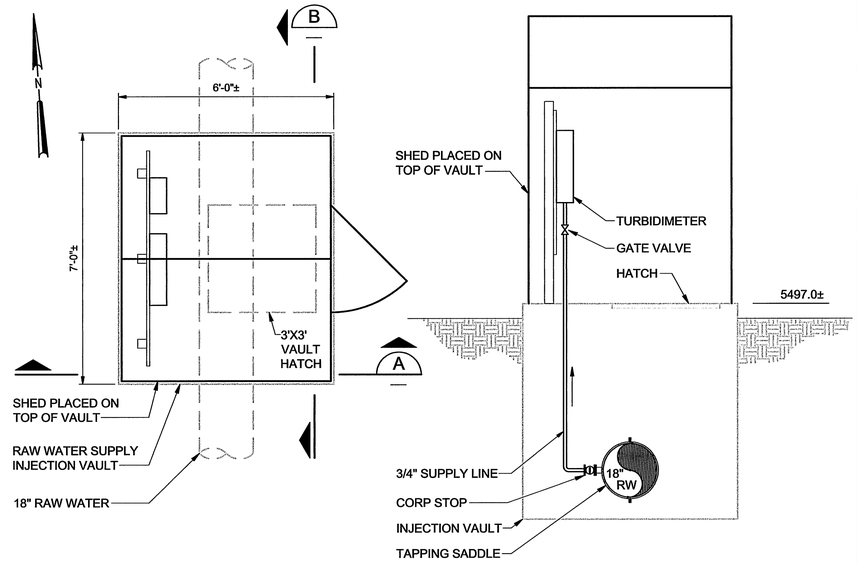

RAW WATER SUPPLY INJECTION VAULT 4

1/2"=1'-0" 70-E-3

SECTION A

1/2" = 1'

NOTES:

1. CONTRACTOR SHALL VERIFY ACTUAL DIMENSIONS PRIOR TO FABRICATION OF VENT.
2. COAT WITH SYSTEM 27 ALL ALUMINUM IN CONTACT WITH CONCRETE AS SPECIFIED IN SECTION 09900.
3. SHOW DETAILS ON SHOP DRAWING DESIGN LAYOUT TO VERIFY PADLOCK ROOM AND OPERATION TO ALLOW REMOVAL OF HOOD.
4. PADLOCKS TO BE FURNISHED BY OWNER.
5. TYPE 304 SST INSECT SCREEN, 10x10 MESH, 0.25" WIRE DIA., 0.075" WIDE OPENINGS, 56.3 PERCENT OPEN AREAS; MOUNTED BETWEEN 2 LAYERS OF SST (TYPE 304) SUPPORT MESH, 0.063" WIRE DIA., 0.437" WIDE OPENINGS WITH 76.4PERCENT OPEN AREAS.

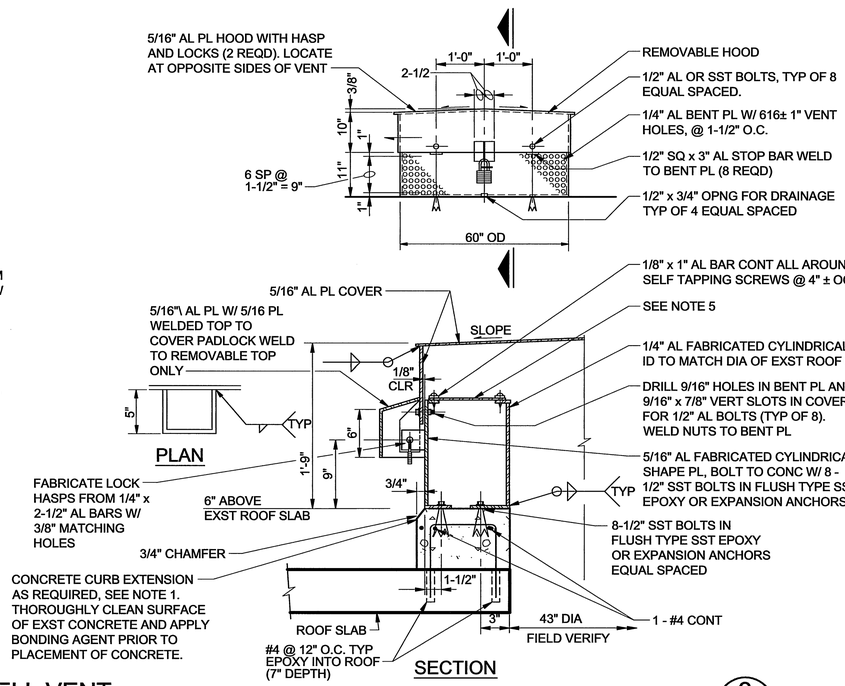

CLEARWELL VENT 3

NTS 5-C-10

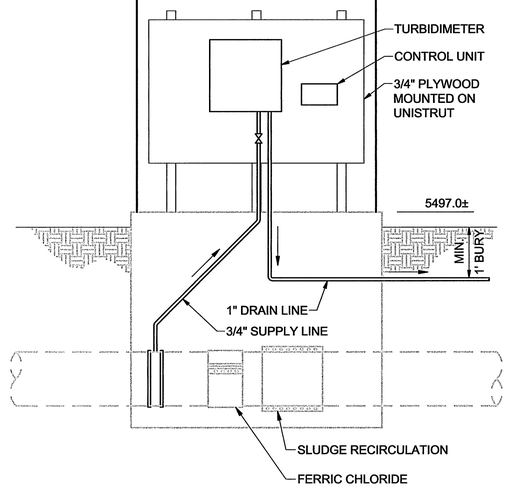

SECTION B

1/2" = 1'

NOTES:

1. Provide enclosures, protective devices, single-pole disconnects, junction boxes, power and signal conduits, cables, and terminations to facilitate the installation of Influent Turbidity Meter AIT-019 inside shed on top of raw water injection vault as located on drawings.
2. Mount NEMA 4X J-Box and NEMA 4X single-pole disconnect (for instrument power connection and isolation) and Turbidity Instrument AIT-019 inside shed on top of raw water injection vault. AIT-019 will provide 4-20mA signal to Main Control Panel Analog Input Slot 1 Channel 0 per US Filter Drawing 2003247101 Sheet 3 of 6.
3. Utilize spare 15A breaker (ckt 31) inside Panel LP-1 for operation of Turbidity Instrument AIT-019.
4. Route [1- Type 3 cable] from (Master) Main Control Panel inside Treatment Building to Instrument AIT-019 and via signal and control conduits routing inside Ductbank Section E to EMH-2. Route additional conduits along with Ductbank Section C as shown on Partial Drawing 70-E-3.
5. Route [2#12, 1#12G] from Panel LP-1 to AIT-019 and NEMA 4X single-pole disconnect via power conduits routing inside Ductbank Section E to EMH-2 Route additional conduits along with Ductbank Section C as shown on Partial Drawing 70-E-3.

RECORD DRAWINGS

Revisions Drawn by EJA Date 11/2007

THESE RECORD DRAWINGS HAVE BEEN PREPARED, IN PART, ON THE BASIS OF INFORMATION COMPILED BY OTHERS. THEY ARE NOT INTENDED TO REPRESENT IN DETAIL THE EXACT LOCATION, TYPE OF COMPONENT NOR MANNER OF CONSTRUCTION. THE ENGINEER WILL NOT BE RESPONSIBLE FOR ANY ERRORS OR OMISSIONS WHICH HAVE BEEN INCORPORATED INTO THE RECORD DRAWINGS.

THESE DRAWINGS WERE MODIFIED USING AUTOCAD AND REPLOTTED FOR RECORD PURPOSES AND THEREFORE DO NOT HAVE THE ENGINEER'S STAMP OR OTHER SIGNATURES THAT APPEAR ON THE ORIGINAL CONTRACT DRAWINGS.

DSGN	A. FRIEDT
DR	E. ARMIJO
CHK	M. BREWER
APVD	M. BREWER

NO.	DATE	REVISION	BY	APVD

VERIFY SCALE
BAR IS ONE INCH ON ORIGINAL DRAWING. 0 1"
IF NOT ONE INCH ON THIS SHEET, ADJUST SCALES ACCORDINGLY.

Sdg inc. CH2MHILL

BLOOMFIELD, NEW MEXICO
WATER TREATMENT PLANT UPGRADE

MECHAINICAL
MISCELLANEOUS MECHANICAL DETAILS

SHEET	31 OF 47
DWG	10-M-4
DATE	MAY 2006
PROJ	342630

FILENAME:10_10M1D_342630.DWG PLOT DATE: 10-MAY-2006 PLOT TIME: 00:00:00

© CH2M HILL
THIS DOCUMENT, AND THE IDEAS AND DESIGNS INCORPORATED HEREIN, AS AN INSTRUMENT OF PROFESSIONAL SERVICE, IS THE PROPERTY OF CH2M HILL AND IS NOT TO BE USED, IN WHOLE OR IN PART, FOR ANY OTHER PROJECT WITHOUT THE WRITTEN AUTHORIZATION OF CH2MHILL.
REUSE OF DOCUMENTS:

INSTRUMENT IDENTIFICATION

EXAMPLE SYMBOLS

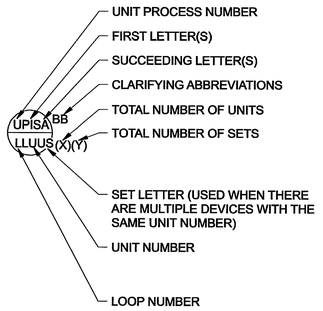

DIGITAL SYSTEM INTERFACES

- △ ANALOG INPUT
- ▽ ANALOG OUTPUT
- △ DISCRETE INPUT
- ▽ DISCRETE OUTPUT

INSTRUMENT IDENTIFICATION LETTERS TABLE

LETTER	FIRST-LETTER		SUCCEEDING-LETTERS		
	PROCESS OR INITIATING VARIABLE	MODIFIER	READOUT OR PASSIVE FUNCTION	OUTPUT FUNCTION	MODIFIER
A	ANALYSIS (+)		ALARM		
B	BURNER, COMBUSTION		USER'S CHOICE (*)	USER'S CHOICE (*)	USER'S CHOICE (*)
C	USER'S CHOICE (*)			CONTROL	
D	DENSITY (S.G)	DIFFERENTIAL			
E	VOLTAGE		PRIMARY ELEMENT, SENSOR		
F	FLOW RATE	RATIO (FRACTION)			
G	USER'S CHOICE (*)		GLASS, GAUGE VIEWING DEVICE	GATE	
H	HAND (MANUAL)				HIGH
I	CURRENT (ELECTRICAL)		INDICATE		
J	POWER	SCAN			
K	TIME, TIME SCHEDULE	TIME RATE OF CHANGE		CONTROL STATION	
L	LEVEL		LIGHT (PILOT)		LOW
M	MOTION	MOMENTARY			MIDDLE, INTERMEDIATE
N	TORQUE		USER'S CHOICE (*)	USER'S CHOICE (*)	USER'S CHOICE (*)
O	USER'S CHOICE (*)		ORIFICE, RESTRICTION		
P	PRESSURE, VACUUM		POINT (TEST) CONNECTION		
Q	QUANTITY	INTEGRATE, TOTALIZE			
R	RADIATION		RECORD OR PRINT		
S	SPEED, FREQUENCY	SAFETY		SWITCH	
T	TEMPERATURE			TRANSMIT	
U	MULTIVARIABLE		MULTIFUNCTION	MULTIFUNCTION	MULTIFUNCTION
V	VIBRATION, MECHANICAL ANALYSIS			VALVE, DAMPER, LOUVER	
W	WEIGHT, FORCE		WELL		
X	UNCLASSIFIED (+)	X AXIS	UNCLASSIFIED (+)	UNCLASSIFIED (+)	UNCLASSIFIED (+)
Y	EVENT, STATE OR PRESENCE	Y AXIS		RELAY, COMPUTE, CONVERT	
Z	POSITION	Z AXIS		DRIVE, ACTUATOR, UNCLASSIFIED FINAL CONTROL ELEMENT	

TABLE BASED ON THE INSTRUMENTATION, SYSTEMS, AND AUTOMATION SOCIETY (ISA) STANDARD.

(+) WHEN USED, EXPLANATION IS SHOWN ADJACENT TO INSTRUMENT SYMBOL. SEE ABBREVIATIONS AND LETTER SYMBOLS.

(*) WHEN USED, DEFINE THE MEANING HERE FOR THE PROJECT

GENERAL INSTRUMENT OR FUNCTIONAL SYMBOLS

- FIELD MOUNTED INSTRUMENT
- REAR-OF-PANEL MOUNTED INSTRUMENT (OPERATOR INACCESSIBLE)
- PANEL MOUNTED INSTRUMENT
- MOTOR CONTROL CENTER MOUNTED INSTRUMENT
- COMPUTER FUNCTION
- PLC FUNCTION

SPECIAL CASES

- YL OO — ON AND OFF EVENT LIGHTS
- HS OO — ON-OFF HAND SWITCH. MAINTAINED CONTACT SWITCH (CONTROLLED DEVICE WILL RESTART ON RETURN OF POWER AFTER POWER FAILURE).
- HS SS — STOP-START HAND SWITCH MOMENTARY CONTACT SWITCHES (CONTROLLED DEVICE WILL NOT RESTART ON RETURN OF POWER AFTER POWER FAILURE).

TRANSDUCERS

A	ANALOG	I	CURRENT
D	DIGITAL	P	PNEUMATIC
E	VOLTAGE	PF	PULSE FREQUENCY
F	FREQUENCY	PD	PULSE DURATION
H	HYDRAULIC	R	RESISTANCE

EXAMPLE:

FY I/P — CURRENT TO PNEUMATIC TRANSDUCER (BACK OF PANEL, IN A FLOW LOOP)

RECORD DRAWINGS

Revisions Drawn by EJA Date 11/2007

THESE RECORD DRAWINGS HAVE BEEN PREPARED, IN PART, ON THE BASIS OF INFORMATION COMPILED BY OTHERS. THEY ARE NOT INTENDED TO REPRESENT IN DETAIL THE EXACT LOCATION, TYPE OF COMPONENT NOR MANNER OF CONSTRUCTION. THE ENGINEER WILL NOT BE RESPONSIBLE FOR ANY ERRORS OR OMISSIONS WHICH HAVE BEEN INCORPORATED INTO THE RECORD DRAWINGS.

THESE DRAWINGS WERE MODIFIED USING AUTOCAD AND REPLOTTED FOR RECORD PURPOSES AND THEREFORE DO NOT HAVE THE ENGINEER'S STAMP OR OTHER SIGNATURES THAT APPEAR ON THE ORIGINAL CONTRACT DRAWINGS.

		NO.	DATE	REVISION	BY	APVD
DSGN	B. PIEPER					
DR	E. ARMIJO					
CHK	M. GROSS					
APVD	M. GROSS					

VERIFY SCALE

BAR IS ONE INCH ON ORIGINAL DRAWING. 0 1"

IF NOT ONE INCH ON THIS SHEET, ADJUST SCALES ACCORDINGLY.

LINE LEGEND

- PROCESS (CLOSED CONDUIT, DASHED LINE INDICATES ALTERNATE FLOW STREAM)
- PROCESS (OPEN CHANNEL)
- ANALOG SIGNAL (4 TO 20 mAdc, ETC.)
- DISCRETE SIGNAL (ON/OFF, ETC.)
- PNEUMATIC SIGNAL
- XXX FILLED SYSTEM SIGNAL
- HYDRAULIC SYSTEM SIGNAL
- DATA LINK
- BUILDING OR FACILITY BOUNDARY
- PACKAGE SYSTEM EQUIPMENT

PARALLELING LINES

(2) 3(2)

(A) (B)

(A) TOTAL OF 2 SIGNALS

(B) 3 TYPICAL SETS OF 2 SIGNALS EACH, TOTAL OF 6 SIGNALS.

- CONNECTING LINES
- NON-CONNECTING LINES

INTERFACE SYMBOLS

S WA — WA D

= PROCESS INTERFACE

= SIGNAL INTERFACE

W = SOURCE UNIT PROCESS NO. (1 OR 2 DIGITS)

A = INTERFACE NO. (2 DIGITS)

D = DESTINATION DRAWING NO.

S = SOURCE DRAWING NO.

N — PROCESS OR SIGNAL LINE CONTINUATION N=1,2,3,ETC — N

INTERFACE TO OR FROM PROCESS EXTERNAL TO PROJECT

SELF CONTAINED VALVE & EQUIPMENT TAG NUMBERS

W-D-X-Y

W = UNIT PROCESS NUMBER

D: ARV = AIR RELEASE VALVE
AVRV = AIR AND VACUUM RELEASE VALVE
E = EJECTOR
G = GATE
M = MECHANICAL EQUIPMENT
P = PUMP
T = TANK

X = LOOP NUMBER
Y = UNIT NUMBER

ABBREVIATIONS & LETTER SYMBOLS

AC	ALTERNATING CURRENT
ALKY	ALKALINITY
AM	AUTO-MANUAL
CAM	COMPUTER-AUTO-MANUAL
CCS	CENTRAL CONTROL SYSTEM
CL_2 etc.	CHLORINE (TYPICAL: USE STANDARD CHEMICAL ELEMENT ABBREVIATION)
CM	COMPUTER-MANUAL
COD	CHEMICAL OXYGEN DEMAND
CP-X	CONTROL PANEL NO. X
DC	DIRECT CURRENT
DO	DISSOLVED OXYGEN
FCL_2	FREE CHLORINE RESIDUAL
FOS	FAST-OFF-SLOW
FOSA	FAST-OFF-SLOW-AUTO
FOSR	FAST-OFF-SLOW-REMOTE
FP-W-X	FIELD PANEL NO. WX (W = UNIT PROCESS NUMBER X = PANEL NUMBER)
FR	FORWARD-REVERSE
HDNS	HARDNESS
HOA	HAND-OFF-AUTO
HOR	HAND-OFF-REMOTE
LEL	LOWER EXPLOSIVE LIMIT
LOS	LOCKOUT STOP
LR	LOCAL-REMOTE
MA	MANUAL-AUTO
MBAS	METHYLENE BLUE ACTIVE SUBSTANCES
MC	MODULATE-CLOSE
MCC-X	MOTOR CONTROL CENTER NO. X
MSC	MANUFACTURER SUPPLIED CABLE
OC	OPEN-CLOSE (D)
OCR	OPEN-CLOSE-REMOTE
OCA	OPEN-CLOSE-AUTO
OO	ON-OFF
OOA	ON-OFF-AUTO
OOR	ON-OFF-REMOTE
OP	ORTHO PHOSPHORUS
ORP	OXIDATION REDUCTION POTENTIAL
OSC	OPEN-STOP-CLOSE
pH	HYDROGEN ION CONCENTRATION
RM-X	REMOTE MULTIPLEXING MODULE NO. X
RTU-X	REMOTE TELEMETRY UNIT NO. X
SF	SLOWER-FASTER
SS	START-STOP
SSC	SUPERVISORY SET POINT CONTROL
TCL_2	TOTAL CHLORINE RESIDUAL
TOC	TOTAL ORGANIC CARBON
TOD	TOTAL OXYGEN DEMAND
TURB	TURBIDITY
VHC	VOLATILE HYDROCARBONS
VIB	VIBRATION
Δ	DIFFERENCE
Σ	SUM
X	MULTIPLY
÷	DIVIDE
f(x)	CHARACTERIZED
X^n	RAISE TO THE Nth POWER
$\sqrt{}$	SQUARE ROOT
AVG	AVERAGE
1:1	REPEAT OR BOOST
>	SELECT HIGHEST SIGNAL
<	SELECT LOWEST SIGNAL
+/-	BIAS
%	GAIN OR ATTENUATE

GENERAL NOTES

1. COMPONENTS AND PANELS SHOWN WITH A SINGLE ASTERISK (*) ARE TO BE PROVIDED AS PART OF A PACKAGE SYSTEM.
2. COMPONENTS AND PANELS SHOWN WITH A DOUBLE ASTERISK (**) ARE TO BE PROVIDED UNDER DIVISION 16, ELECTRICAL.
3. THIS IS A STANDARD LEGEND. THEREFORE, NOT ALL OF THIS INFORMATION MAY BE USED ON THIS PROJECT.

© CH2M HILL

THIS DOCUMENT, AND THE IDEAS AND DESIGNS INCORPORATED HEREIN, AS AN INSTRUMENT OF PROFESSIONAL SERVICE, IS THE PROPERTY OF CH2M HILL AND IS NOT TO BE USED, IN WHOLE OR IN PART, FOR ANY OTHER PROJECT WITHOUT THE WRITTEN AUTHORIZATION OF CH2MHILL.

REUSE OF DOCUMENTS:

Sdg Inc. CH2MHILL

BLOOMFIELD, NEW MEXICO
WATER TREATMENT PLANT
UPGRADE

INSTRUMENTATION AND CONTROL
I&C LEGEND
SHEET
1 OF 2

SHEET	32 OF 47
DWG	60-I-1
DATE	05/04/2006
PROJ	342630

FILENAME: 60_60I1D_362630.DGN PLOT DATE: 06-MAY-2006 PLOT TIME: 00:00:00

VALVE SYMBOLS

- GATE
- KNIFE GATE
- BUTTERFLY
- GLOBE
- BALL
- VEE- BALL
- PLUG
- SEAT PORT ECCENTRIC PLUG
- DIAPHRAGM
- PINCH
- NEEDLE
- SWING CHECK
- BALL CHECK
- BACKFLOW PREVENTER
- ROTARY
- PRESSURE RELIEF
- AIR AND/OR VACUUM RELEASE
- REGULATED SIDE PRESSURE CONTROL
- MULTI-PORT VALVES (GATE VALVE SHOWN. FOR OTHER VALVE TYPES, APPROPRIATE VALVE SYMBOL SHOWN.) SEAT PORTS ARE IMPLIED BY INDICATED FLOW PATTERN.
- ANGLE GATE
- TELESCOPE
- SAMPLE
- MUD
- PRESSURE REGULATING (CLAY-TYPE)

GATE SYMBOLS

- SLUICE
- BUTTERFLY
- FABRICATED SLIDE
- FLAP
- STOP LOG

ACTUATOR SYMBOLS

- XX PNEUMATIC DIAPHRAM SPRING-OPPOSED, SINGLE OR DOUBLE ACTING
- XX PNEUMATIC CYLINDER SINGLE OR DOUBLE ACTING ACTUATED BY ONE INPUT
- XX ELECTRIC MOTOR
- XX SOLENOID
- XX HYDRAULIC
- VALVE POSITIONER
- MANUAL
- XX ELECTROHYDRAULIC
- DIAPHRAGM, DIFFERENTIAL PRESSURE

NOTE:
ON LOSS OF PRIMARY POWER (PNEUMATIC, ELECTRICAL OR HYDRAULIC)
XX: FO =FAIL OPEN
FC =FAIL CLOSED
FLP=FAIL TO LAST POSITION

PRIMARY ELEMENT SYMBOLS

- PARSHALL FLUME
- WEIR
- ORFICE PLATE
- FLOW TUBE
- PITOT-STATIC
- VORTEX METER
- ULTRASONIC FLOWMETER
- ELECTROMAGNETIC FLOWMETER
- PROPELLER OR TURBINE METER
- THERMAL FLOWMETER
- ROTAMETER
- DENSITY METER
- GENERIC
- LEVEL (ULTRASONIC)
- LEVEL (BUBBLER TUBE)
- LEVEL (FLOAT)

MISCELLANEOUS SYMBOLS

- DIAPHRAGM SEAL
- BLIND FLANGE
- AIR GAP
- VENT TO ATMOSPHERE
- AERATOR
- PLUG
- RECEPTACLE
- SELF CONTAINED AIR SUPPLY
- COMPOSITE SAMPLER (DIPPER TYPE)
- COMPOSITE SAMPLER (SUCTION TYPE)
- TV CAMERA
- OR INTERLOCK. SEE CONTROL DIAGRAMS
- PURGE SET X: W = WATER A = AIR SEE
- XX AIR SET XX= SUPPLY PRESSURE IN PSIG.
- FILTER/ REGULATOR/ GAUGE SET
- FLEXIBLE CONNECTOR
- PULSATION DAMPENER
- FILTER
- DRIP TRAP
- FLAME TRAP
- STRAINER
- HORN
- 120V 120 VOLT, 60 HZ POWER
- 480V 480 VOLT, 60 HZ POWER
- ANNULAR DIAPHRAGM SEAL
- RUPTURE DISK (PRESSURE)
- RUPTURE DISK (VACUUM)
- PIG INSERT POINT
- OR PIG CATCH POINT
- MIXER
- ELECTRIC MOTOR
- TV MONITOR
- AND LOGIC ELEMENT: IF A AND NOT B THEN C
- OR LOGIC ELEMENT: IF A OR B THEN C
- FLUSHING CONNECTION
- HOSE ADAPTOR
- SEAL WATER SET
- SIGHT GLASS
- FFLCPLLLX PANEL CONTINUED ON SAME OR OTHER DRAWING; PANEL OUTLINE; PANEL NAME
- SKIMMING MECHANISM
- SCREW
- SCREW CONVEYOR
- INLINE SILENCER
- PIPE CAP
- CALIBRATION COLUMN

PUMP AND COMPRESSOR SYMBOLS

NOTE: XX: AS ADJUSTABLE SPEED
CS-1 CONSTANT SPEED (SINGLE SPEED)
CS-2 CONSTANT SPEED (TWO SPEED)

- CENTRIFUGAL PUMP (DRY PIT)
- CENTRIFUGAL WET PIT PUMP OR TURBINE PUMP
- RECIPROCATING OR METERING PUMP (POSITIVE DISPLACEMENT)
- DIAPHRAGM PUMP
- GEAR PUMP OR BLOWER (POSITIVE DISPLACEMENT)
- PISTON PUMP
- PROGRESSIVE CAVITY PUMP
- COMPRESSOR (CENTRIFUGAL)
- COMPRESSOR (PISTON)
- BLOWER OR FAN (CENTRIFUGAL)
- EJECTOR
- SUBMERSIBLE SUMP PUMP
- VACUUM PUMP
- ROTARY PUMP
- SCREW PUMP

LINE SIZE AND MATERIAL IDENTIFICATION

(FOR REFERENCE ONLY. SEE SITE AND MECHANICAL DRAWINGS)

CISP	CAST IRON SOIL PIPE
CLDI	CEMENT LINED DUCTILE IRON
CLSTL	CEMENT LINED STEEL
CU	COPPER
FRP	FIBERGLASS REINFORCED PLASTIC
PVC	POLYVINYL CHLORIDE
SST	STAINLESS STEEL
STL	STEEL

FLOW STREAM IDENTIFICATION

AHP	AIR,HIGH PRESSURE PROCESS
BWA	BACKWASH AIR
BWS	BACKWASH SUPPLY
BWW	BACKWASH WASTE
CW	CLAIRFIED WATER
D	DRAIN (SANITARY)
DR	DRAIN (PROCESS)
FC	FERRIC CHLORINE
FI	FILTER INFLUENT
FE	FILTER EFFLUENT
FTW	FILTER TO WASTE
FW	FINISHED WATER
NG	NATURAL GAS
OF	OVERFLOW
PD	PLANT DRAIN
POA	POLYMER/POLYMER SOLITION, (FILTER AID)
PON	POLYMER/POLYMER SOLITION, NONANIONIC (SLUDGE CONDITIONING)
RW	RAW WATER
SP	SAMPLE
SLW	SLUDGE WASTE
SLR	SLUDGE RECIRCULATION
SH	SODIUM HYPOCHLORITE
SD	STORM DRAINAGE
SS	SANITARY SEWER
SW	SETTLED WATER
VAR	VENT, AIR RELEASE
V or VTR	VENT (SANITARY)
VTR	VENT THROUGH ROOF
W	POTABLE WATER

RECORD DRAWINGS

Revisions Drawn by EJA Date 11/2007

THESE RECORD DRAWINGS HAVE BEEN PREPARED, IN PART, ON THE BASIS OF INFORMATION COMPILED BY OTHERS. THEY ARE NOT INTENDED TO REPRESENT IN DETAIL THE EXACT LOCATION, TYPE OF COMPONENT NOR MANNER OF CONSTRUCTION. THE ENGINEER WILL NOT BE RESPONSIBLE FOR ANY ERRORS OR OMISSIONS WHICH HAVE BEEN INCORPORATED INTO THE RECORD DRAWINGS.

THESE DRAWINGS WERE MODIFIED USING AUTOCAD AND REPLOTTED FOR RECORD PURPOSES AND THEREFORE DO NOT HAVE THE ENGINEER'S STAMP OR OTHER SIGNATURES THAT APPEAR ON THE ORIGINAL CONTRACT DRAWINGS.

DSGN	B. PIEPER
DR	E. ARMIJO
CHK	M. GROSS
APVD	M. GROSS

NO.	DATE	REVISION	BY	APVD

VERIFY SCALE
BAR IS ONE INCH ON ORIGINAL DRAWING. 0 1"
IF NOT ONE INCH ON THIS SHEET, ADJUST SCALES ACCORDINGLY.

Sdg Inc. CH2MHILL

BLOOMFIELD, NEW MEXICO
WATER TREATMENT PLANT UPGRADE

INSTRUMENTATION AND CONTROL
I & C
LEGEND SHEET
2 OF 2

SHEET	33 OF 47
DWG	60-I-2
DATE	05/04/2006
PROJ	342630

FILENAME: 60_60I2_362630.DGN PLOT DATE: 04-MAY-2006 PLOT TIME: 00:00:00

© CH2M HILL
THIS DOCUMENT, AND THE IDEAS AND DESIGNS INCORPORATED HEREIN, AS AN INSTRUMENT OF PROFESSIONAL SERVICE, IS THE PROPERTY OF CH2M HILL AND IS NOT TO BE USED, IN WHOLE OR IN PART, FOR ANY OTHER PROJECT WITHOUT THE WRITTEN AUTHORIZATION OF CH2MHILL
REUSE OF DOCUMENTS:

PLC MASTER

PLC SLAVE A

PROFIBUS

SV-109 — OPEN / CLOSE

AIT 019 — TURBIDITY

INFLUENT 20' - 30' SUPPLY PRESSURE — RW

TURB AIT 019

TURB AE 019

SV-019

COAGULANT FEED — FC

STATIC MIXER

SLR

FIT 104 — FLOW

FCV-104 — POSITION

FCV-104

FIT 104

FE-104

BFV-104

D 60-I-6 — POA/PON

G 60-I-7 — POA/PON

E 60-I-4 — SLR

F 60-I-4 — BWA

SV-117 — OPEN / CLOSE

SV-105 — OPEN / CLOSE

CV-105 S SV-105

CKV-105

FCV-117

SV-117 S CV-105

FIT 105

FE-105

VFD 105

VFD 110

BV-105S BV-116

BV-105D

RP-105

VFD 110

PROFIBUS

ZSP 116 — POSITION

ZSR 116 — POSITION

ZSR 116

ZSP 116

LT 110

TO VFD 110

ZSF 116 — POSITION

SV-109 — OPEN / CLOSE

ZSF 116

AIT 110

AE 110

SV-110 — OPEN / CLOSE

PSH 110 — PRESSURE HIGH

PSHH 110 — PRESSURE HIGH

PSHH 110

PSH 110

PI 110

SV-111 — OPEN / CLOSE

SV-107 — OPEN / CLOSE

CV-107 SV-107

BWW

LIT 101 — LEVEL

LIT 101

PSL 101 — PRESSURE LOW

PSL 101

PI 101

SV-112 — OPEN / CLOSE

PSH 102 — PRESSURE LOW

PSH 102

SV-101 — OPEN / CLOSE

AIT 101

SAMPLE PUMP

SV-101

AE 101

SP

ABSORPTION CLARIFIER MEDIA

TUBE CLARIFIER

MIXED MEDIA FILTER

BV-113

BFV-110

CV-110 SV-110

TP-110

WASTE DISCHARGE

CKV-111

CV-111

SV-111

BWA

FE / BSW / FTW — A 60-I-5

SLW

TO SLUDGE BLOWDOWN

RW — C 60-I-4

SV-112

CKV-112

CV-112

RECORD DRAWINGS

Revisions Drawn by EJA Date 11/2007

THESE RECORD DRAWINGS HAVE BEEN PREPARED, IN PART, ON THE BASIS OF INFORMATION COMPILED BY OTHERS. THEY ARE NOT INTENDED TO REPRESENT IN DETAIL THE EXACT LOCATION, TYPE OF COMPONENT NOR MANNER OF CONSTRUCTION. THE ENGINEER WILL NOT BE RESPONSIBLE FOR ANY ERRORS OR OMISSIONS WHICH HAVE BEEN INCORPORATED INTO THE RECORD DRAWINGS.

THESE DRAWINGS WERE MODIFIED USING AUTOCAD AND REPLOTTED FOR RECORD PURPOSES AND THEREFORE DO NOT HAVE THE ENGINEER'S STAMP OR OTHER SIGNATURES THAT APPEAR ON THE ORIGINAL CONTRACT DRAWINGS.

DSGN	
DR	
CHK	
APVD	

NO.	DATE	REVISION	BY	APVD

VERIFY SCALE

BAR IS ONE INCH ON ORIGINAL DRAWING. 0 1"

IF NOT ONE INCH ON THIS SHEET, ADJUST SCALES ACCORDINGLY.

Sdg Inc. CH2MHILL

BLOOMFIELD, NEW MEXICO
WATER TREATMENT PLANT
UPGRADE

INSTRUMENTATION AND CONTROL

PROCESS
FLOW
P&ID

SHEET	34 OF 45
DWG	60-I-3
DATE	02/12/2007
PROJ	342630

FILENAME: PLOT DATE: PLOT TIME:

© CH2M HILL

REUSE OF DOCUMENTS: THIS DOCUMENT AND THE IDEAS AND DESIGNS INCORPORATED HEREIN, AS AN INSTRUMENT OF PROFESSIONAL SERVICE, IS THE PROPERTY OF CH2M HILL AND IS NOT TO BE USED, IN WHOLE OR IN PART, FOR ANY OTHER PROJECT WITHOUT THE WRITTEN AUTHORIZATION OF CH2M HILL.

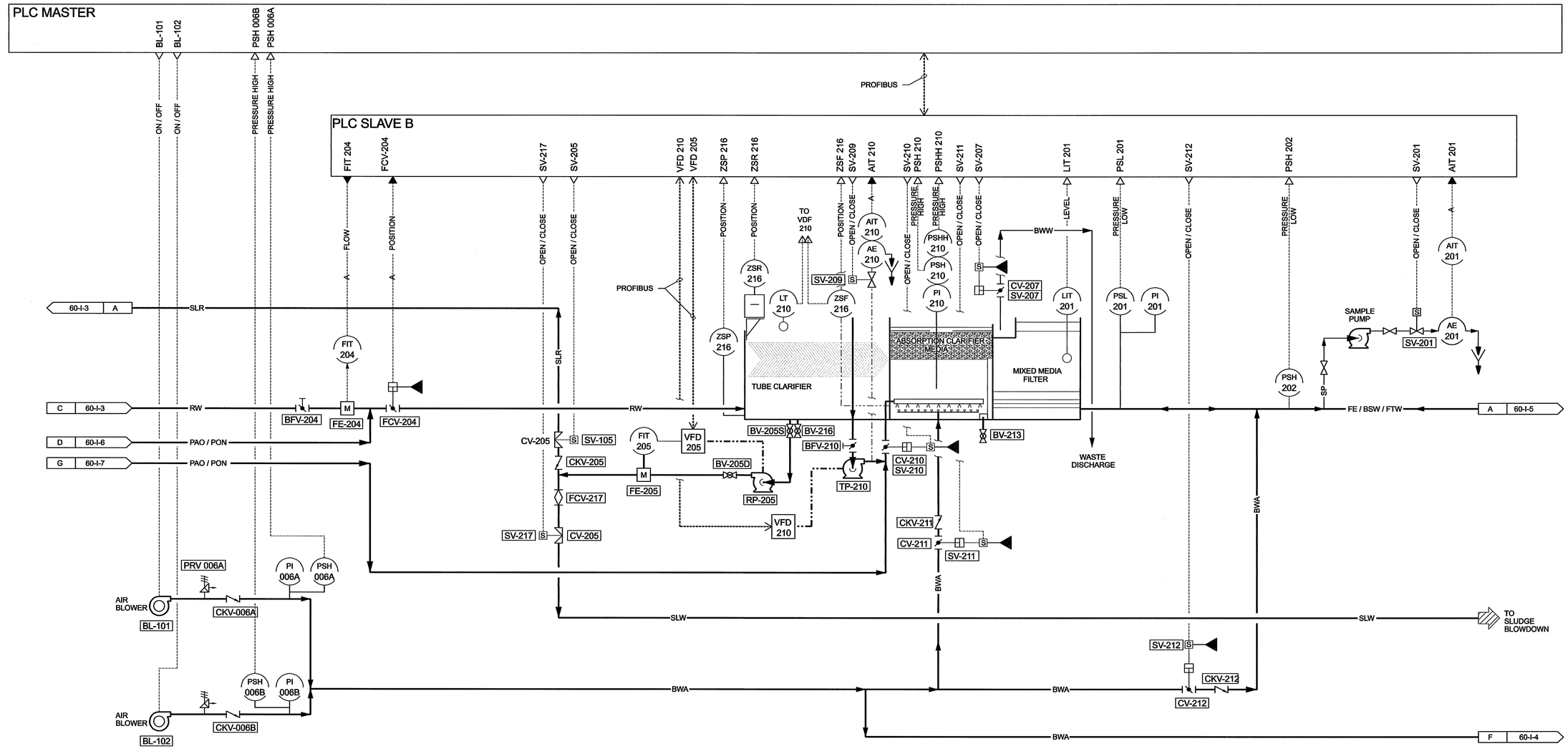

RECORD DRAWINGS

Revisions Drawn by EJA Date 11/2007

THESE RECORD DRAWINGS HAVE BEEN PREPARED, IN PART, ON THE BASIS OF INFORMATION COMPILED BY OTHERS. THEY ARE NOT INTENDED TO REPRESENT IN DETAIL THE EXACT LOCATION, TYPE OF COMPONENT NOR MANNER OF CONSTRUCTION. THE ENGINEER WILL NOT BE RESPONSIBLE FOR ANY ERRORS OR OMISSIONS WHICH HAVE BEEN INCORPORATED INTO THE RECORD DRAWINGS.

THESE DRAWINGS WERE MODIFIED USING AUTOCAD AND REPLOTTED FOR RECORD PURPOSES AND THEREFORE DO NOT HAVE THE ENGINEER'S STAMP OR OTHER SIGNATURES THAT APPEAR ON THE ORIGINAL CONTRACT DRAWINGS.

DSGN	B. PIEPER
DR	E. ARMIJO
CHK	M. GROSS
APVD	M. GROSS

NO.	DATE	REVISION	BY	APVD

VERIFY SCALE
BAR IS ONE INCH ON ORIGINAL DRAWING. 0 1"
IF NOT ONE INCH ON THIS SHEET, ADJUST SCALES ACCORDINGLY.

Sdg Inc. CH2MHILL

BLOOMFIELD, NEW MEXICO
WATER TREATMENT PLANT
UPGRADE

INSTRUMENTATION AND CONTROL
PROCESS
FLOW
P&ID

SHEET	35 OF 47
DWG	60-I-4
DATE	05/04/2006
PROJ	342630

FILENAME: Drawing_Name PLOT DATE: DD-MMM-YYYY PLOT TIME: 00:00:00

©CH2M HILL
THIS DOCUMENT, AND THE IDEAS AND DESIGNS INCORPORATED HEREIN, AS AN INSTRUMENT OF PROFESSIONAL SERVICE, IS THE PROPERTY OF CH2M HILL AND IS NOT TO BE USED, IN WHOLE OR IN PART, FOR ANY OTHER PROJECT WITHOUT THE WRITTEN AUTHORIZATION OF CH2MHILL.
REUSE OF DOCUMENTS:

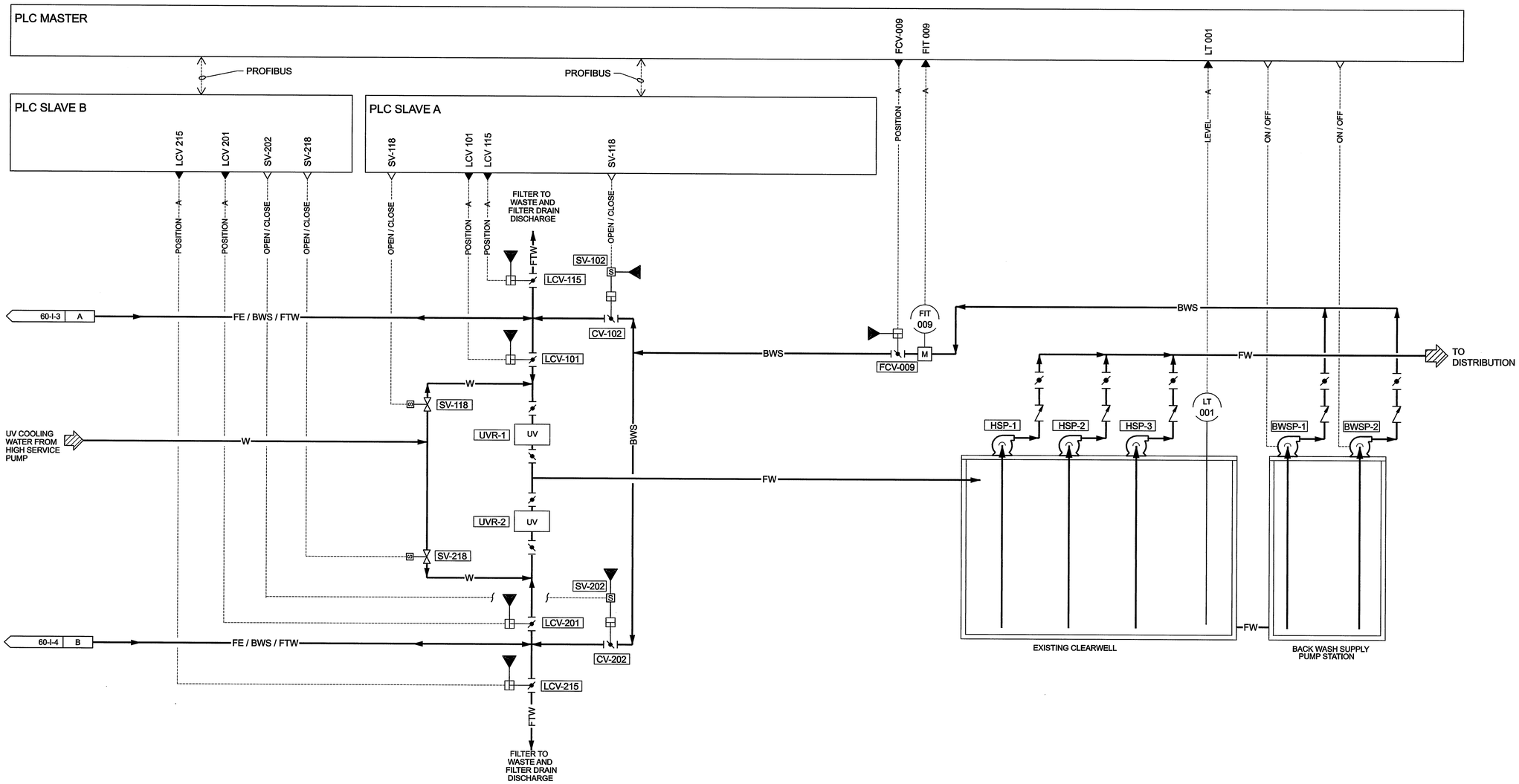

RECORD DRAWINGS

Revisions Drawn by EJA Date 11/2007

THESE RECORD DRAWINGS HAVE BEEN PREPARED, IN PART, ON THE BASIS OF INFORMATION COMPILED BY OTHERS. THEY ARE NOT INTENDED TO REPRESENT IN DETAIL THE EXACT LOCATION, TYPE OF COMPONENT NOR MANNER OF CONSTRUCTION. THE ENGINEER WILL NOT BE RESPONSIBLE FOR ANY ERRORS OR OMISSIONS WHICH HAVE BEEN INCORPORATED INTO THE RECORD DRAWINGS.

THESE DRAWINGS WERE MODIFIED USING AUTOCAD AND REPLOTTED FOR RECORD PURPOSES AND THEREFORE DO NOT HAVE THE ENGINEER'S STAMP OR OTHER SIGNATURES THAT APPEAR ON THE ORIGINAL CONTRACT DRAWINGS.

DSGN	B. PIEPER
DR	E. ARMIJO
CHK	M. GROSS
APVD	M. GROSS

NO.	DATE	REVISION	BY	APVD

VERIFY SCALE

BAR IS ONE INCH ON ORIGINAL DRAWING. 0 1"

IF NOT ONE INCH ON THIS SHEET, ADJUST SCALES ACCORDINGLY.

Sdg Inc. CH2MHILL

BLOOMFIELD, NEW MEXICO
WATER TREATMENT PLANT
UPGRADE

INSTRUMENTATION AND CONTROL

PROCESS
FLOW
P&ID

SHEET	36 OF 47
DWG	60-I-5
DATE	05/04/2006
PROJ	342630

FILENAME: Drawing_Name PLOT DATE: DD-MMM-YYYY PLOT TIME: 00:00:00

© CH2M HILL

THIS DOCUMENT, AND THE IDEAS AN DESIGNS INCORPORATED HEREIN, AS AN INSTRUMENT OF PROFESSIONAL SERVICE, IS THE PROPERTY OF CH2M HILL AND IS NOT TO BE USED, IN WHOLE OR IN PART, FOR ANY OTHER PROJECT WITHOUT THE WRITTEN AUTHORIZATION OF CH2MHILL.

REUSE OF DOCUMENTS:

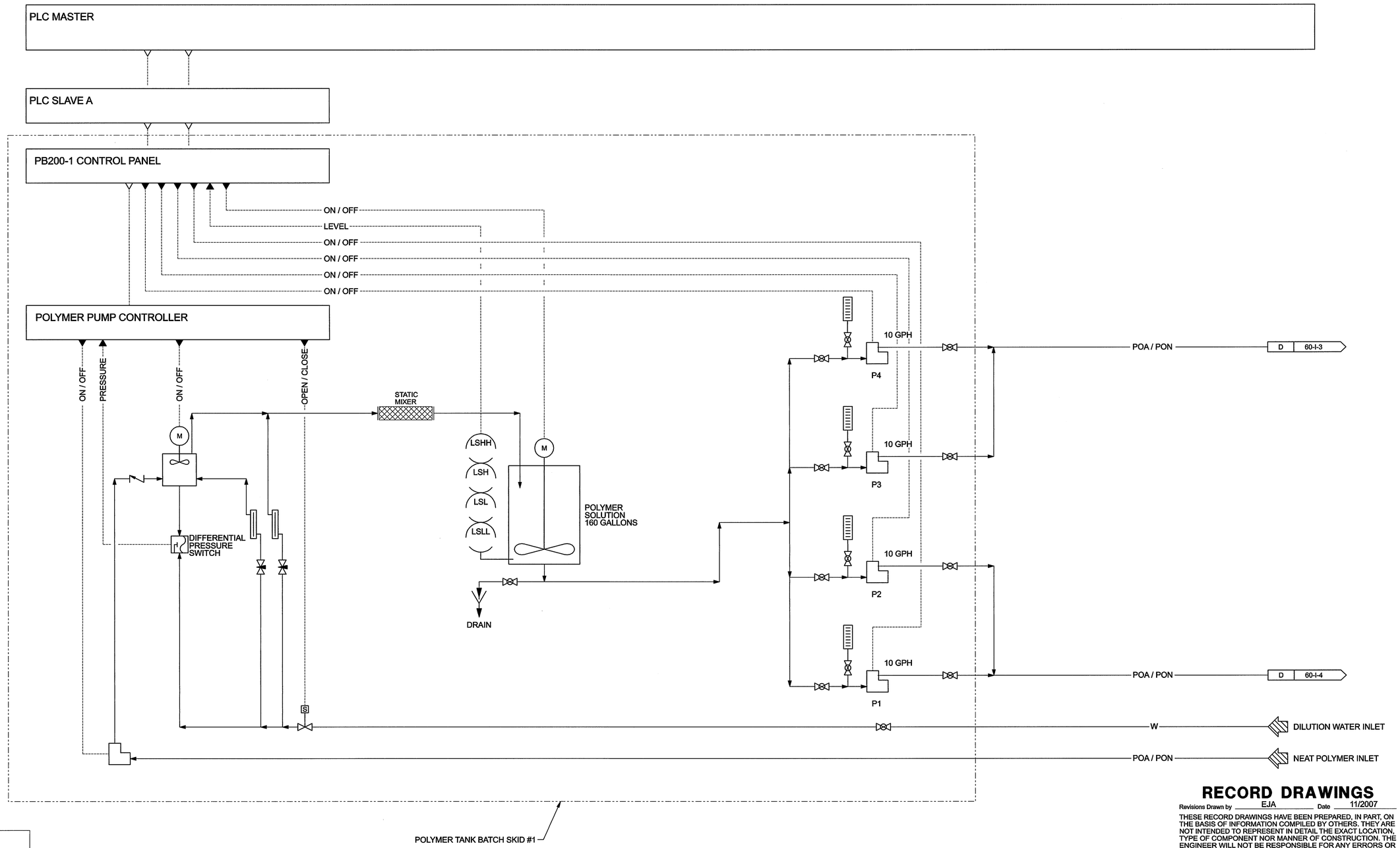

RECORD DRAWINGS

Revisions Drawn by EJA Date 11/2007

THESE RECORD DRAWINGS HAVE BEEN PREPARED, IN PART, ON THE BASIS OF INFORMATION COMPILED BY OTHERS. THEY ARE NOT INTENDED TO REPRESENT IN DETAIL THE EXACT LOCATION, TYPE OF COMPONENT NOR MANNER OF CONSTRUCTION. THE ENGINEER WILL NOT BE RESPONSIBLE FOR ANY ERRORS OR OMISSIONS WHICH HAVE BEEN INCORPORATED INTO THE RECORD DRAWINGS.

THESE DRAWINGS WERE MODIFIED USING AUTOCAD AND REPLOTTED FOR RECORD PURPOSES AND THEREFORE DO NOT HAVE THE ENGINEER'S STAMP OR OTHER SIGNATURES THAT APPEAR ON THE ORIGINAL CONTRACT DRAWINGS.

DSGN							
DR	E. ARMIJO						
CHK							
APVD		NO.	DATE	REVISION	BY	APVD	

VERIFY SCALE
BAR IS ONE INCH ON ORIGINAL DRAWING.
0 1"
IF NOT ONE INCH ON THIS SHEET, ADJUST SCALES ACCORDINGLY.

Sdg Inc. CH2MHILL

BLOOMFIELD, NEW MEXICO
WATER TREATMENT PLANT
UPGRADE

INSTRUMENTATION AND CONTROL
PROCESS
FLOW
P&ID

SHEET	37 OF 47
DWG	60-I-6
DATE	02/23/2007
PROJ	342630

FILENAME: Drawing_Name PLOT DATE: DD-MMM-YYYY PLOT TIME: 00:00:00

REUSE OF DOCUMENTS: THIS DOCUMENT, AND THE IDEAS AND DESIGNS INCORPORATED HEREIN, AS AN INSTRUMENT OF PROFESSIONAL SERVICE, IS THE PROPERTY OF CH2M HILL AND IS NOT TO BE USED, IN WHOLE OR IN PART, FOR ANY OTHER PROJECT WITHOUT THE WRITTEN AUTHORIZATION OF CH2MHILL.
©CH2M HILL

PLC MASTER

PLC SLAVE B

PB200-2 CONTROL PANEL

ON / OFF
LEVEL
ON / OFF
ON / OFF
ON / OFF
ON / OFF

POLYMER PUMP CONTROLLER

ON / OFF
PRESSURE
ON / OFF
OPEN / CLOSE

STATIC MIXER

M

DIFFERENTIAL PRESSURE SWITCH

LSHH
LSH
LSL
LSLL

M

POLYMER SOLUTION 160 GALLONS

DRAIN

10 GPH
P4
POA / PON
G 60-I-3

10 GPH
P3

10 GPH
P2

10 GPH
P1
POA / PON
G 60-I-4

S
W
DILUTION WATER INLET

POA / PON
NEAT POLYMER INLET

POLYMER TANK BATCH SKID #2

RECORD DRAWINGS

Revisions Drawn by EJA Date 11/2007

THESE RECORD DRAWINGS HAVE BEEN PREPARED, IN PART, ON THE BASIS OF INFORMATION COMPILED BY OTHERS. THEY ARE NOT INTENDED TO REPRESENT IN DETAIL THE EXACT LOCATION, TYPE OF COMPONENT NOR MANNER OF CONSTRUCTION. THE ENGINEER WILL NOT BE RESPONSIBLE FOR ANY ERRORS OR OMISSIONS WHICH HAVE BEEN INCORPORATED INTO THE RECORD DRAWINGS.

THESE DRAWINGS WERE MODIFIED USING AUTOCAD AND REPLOTTED FOR RECORD PURPOSES AND THEREFORE DO NOT HAVE THE ENGINEER'S STAMP OR OTHER SIGNATURES THAT APPEAR ON THE ORIGINAL CONTRACT DRAWINGS.

DSGN	.
DR	E. ARMIJO
CHK	.
APVD	.

NO.	DATE	REVISION	BY	APVD

VERIFY SCALE
BAR IS ONE INCH ON ORIGINAL DRAWING.
0 1"
IF NOT ONE INCH ON THIS SHEET, ADJUST SCALES ACCORDINGLY.

Sdg Inc. CH2MHILL

BLOOMFIELD, NEW MEXICO
WATER TREATMENT PLANT
UPGRADE

INSTRUMENTATION AND CONTROL
PROCESS
FLOW
P&ID

SHEET	38 OF 47
DWG	60-I-7
DATE	02/23/2007
PROJ	342630

FILENAME: Drawing_Name PLOT DATE: DD-MMM-YYYY PLOT TIME: 00:00:00

© CH2M HILL

THIS DOCUMENT, AND THE IDEAS AND DESIGNS INCORPORATED HEREIN, AS AN INSTRUMENT OF PROFESSIONAL SERVICE, IS THE PROPERTY OF CH2M HILL AND IS NOT TO BE USED, IN WHOLE OR IN PART, FOR ANY OTHER PROJECT WITHOUT THE WRITTEN AUTHORIZATION OF CH2MHILL.

REUSE OF DOCUMENTS:

ELECTRICAL LEGEND

SYMBOL	DESCRIPTION
	CONNECTION POINT TO EQUIPMENT SPECIFIED. FURNISHED AND INSTALLED UNDER OTHER DIVISIONS. RACEWAY, CONDUCTOR AND CONNECTION SPECIFIED IN DIVISION 16. COORDINATE FINAL CONNECTION WITH EQUIPMENT SUPPLIER.
MCC-A	MAJOR ELECTRICAL COMPONENT OR DEVICE - NAME OR IDENTIFYING SYMBOL AS SHOWN.
	BRANCH CIRCUIT PANELBOARD
UH	UNIT HEATER
TTC	TELEPHONE TERMINAL CABINET
CTC	COMPUTER TERMINAL CABINET
TJB	TERMINAL JUNCTION BOX
M	MOTOR, SQUIRREL CAGE INDUCTION, HORSEPOWER INDICATED ON ONE-LINE DIAGRAM, (M) SHOWN ON PLANS
1	LUMINAIRE, SEE SCHEDULE
2	LUMINAIRE, SEE SCHEDULE
3	LUMINAIRE, UNSWITCHED, SEE SCHEDULE
4	LUMINAIRE AND POLE, SEE SCHEDULE
5	WALL MOUNTED LUMINAIRE, SEE SCHEDULE
6	EMERGENCY LIGHTING UNIT
	EXIT LIGHTS, SEE SCHEDULE
Sa or 2a	SMALL LETTER SUBSCRIPT AT SWITCH AND LUMINAIRE INDICATES SWITCHING. SUBSCRIPT NUMBER AT LUMINAIRE INDICATES CIRCUIT IN PANELBOARD.
LA-2	HOME RUN - DESTINATION SHOWN
or G	EXPOSED CONDUIT AND CONDUCTORS*
or G	CONCEALED CONDUIT AND CONDUCTORS*

NOTE:
* ALL UNMARKED CONDUIT RUNS CONSIST OF TWO NO.12 CONDUCTORS IN CONDUIT. RUNS MARKED WITH CROSSHATCHES INDICATE NUMBER OF NO. 12 CONDUCTORS. CROSSHATCH WITH SUBSCRIPT "G" INDICATES GREEN GROUND WIRE. SIZE CONDUIT ACCORDING TO SPECIFICATIONS AND APPLICABLE CODE.

[ ]	CIRCUIT CALLOUT, [1"C,3#8,1#10G] CONDUIT, CONDUCTOR, AND NUMBER INDICATED. [2-3"C,3-350 KCMIL, 1#1/0G EA]; INDICATES TWO CONDUITS, EACH WITH CONDUCTORS INDICATED.
	GROUND TEST WELL
	GROUND ROD
	CROSSHATCHES WITH BAR INDICATE #10 CONDUCTOR. SIZE CONDUIT ACCORDING TO SPECIFICATIONS AND APPLICABLE CODE.
	CONDUIT DOWN
	CONDUIT UP
	CONDUIT, STUBBED AND CAPPED AS SHOWN
B	BUS DUCT, SEE SPECIFICATIONS
CE	CONCRETE ENCASED CONDUIT
DB	DIRECT BURIED CONDUIT
G	GROUND
P	TRENCHING FOR UTILITY COMPANY PRIMARY POWER CIRCUITS
T	TRENCHING FOR TELEPHONE COMPANY CIRCUITS
S	SWITCH:

WALL SWITCH:
- 2- DOUBLE POLE
- 3- THREE WAY
- 4- FOUR WAY
- CRE- CORROSION RESISTANT
- D- DIMMER
- K- KEY OPERATED
- P- PILOT LIGHT
- WP- WEATHERPROOF

MOTOR SWITCH:
- M- MOTOR RATED TOGGLE SWITCH WITHOUT OVERLOADS
- MS- MANUAL MOTOR STARTER WITH OVERLOADS

RECORD DRAWINGS

Revisions Drawn by EJA Date 11/2007

THESE RECORD DRAWINGS HAVE BEEN PREPARED, IN PART, ON THE BASIS OF INFORMATION COMPILED BY OTHERS. THEY ARE NOT INTENDED TO REPRESENT IN DETAIL THE EXACT LOCATION, TYPE OF COMPONENT NOR MANNER OF CONSTRUCTION. THE ENGINEER WILL NOT BE RESPONSIBLE FOR ANY ERRORS OR OMISSIONS WHICH HAVE BEEN INCORPORATED INTO THE RECORD DRAWINGS.

THESE DRAWINGS WERE MODIFIED USING AUTOCAD AND REPLOTTED FOR RECORD PURPOSES AND THEREFORE DO NOT HAVE THE ENGINEER'S STAMP OR OTHER SIGNATURES THAT APPEAR ON THE ORIGINAL CONTRACT DRAWINGS.

SYMBOL	DESCRIPTION
	CONVENIENCE RECEPTACLE - DUPLEX UNLESS SPECIFIED OTHERWISE WP- WEATHERPROOF C- CLOCK HANGER TL- TWIST LOCK CRE- CORROSION RESISTANT
30	RECEPTACLE - 240V, 1PH, AMPERAGE INDICATED
30	RECEPTACLE, SPECIAL PURPOSE - AMPERAGE INDICATED
	DUPLEX CONVENIENCE RECEPTACLE - FLUSH IN FLOOR
	MULTI-OUTLET ASSEMBLY
	CLOCK HANGER CONVENIENCE RECEPTACLE
	TELEPHONE RECEPTACLE (OUTLET BOX ONLY) FLUSH IN FLOOR
	TELEPHONE RECEPTACLE (OUTLET BOX ONLY)
	DATA RECEPTACLE (OUTLET BOX ONLY)
HH	GENERAL CONTROL OR WIRING DEVICE. LETTER SYMBOLS OR ABBREVIATIONS INDICATE TYPE OF DEVICE.
CS	CONTROL STATION, SEE CONTROL DIAGRAMS FOR TYPE.
J	CONDUIT FITTING OR JUNCTION BOX
30	NONFUSED DISCONNECT SWITCH, SIZE INDICATED, 3 POLE UNLESS INDICATED OTHERWISE.
60/40 F	FUSED DISCONNECT SWITCH, SIZE INDICATED (60/40, 60 = SWITCH RATING: 40 = FUSE RATING) 3 POLE UNLESS INDICATED OTHERWISE.
2	CONTACTOR, MAGNETIC, NEMA SIZE INDICATED.
30 L	LIGHTING CONTACTOR, CURRENT RATING INDICATED. FOR NUMBER OF POLES, SEE CONTROL DIAGRAM.
2	STARTER MAGNETIC NEMA SIZE INDICATED, SEE CONTROL DIAGRAM.
2	COMBINATION (FUSE OR CIRCUIT BREAKER AS INDICATED) MAGNETIC STARTER, NEMA SIZE INDICATED, SEE CONTROL DIAGRAM.
	METERING FACILITIES
	GROUND ROD
	MULTI-PARTY DESK TOP COMMUNICATIONS SYSTEM STATION WITH REMOTE AMPLIFIER
W	MULTI-PARTY WALL MOUNTED COMMUNICATIONS SYSTEM STATION WITH INTEGRAL AMPLIFIER
	CONE TYPE PAGING SPEAKER, CEILING MOUNTED
	INTERIOR PAGING TRUMPET SOUND REPRODUCER, WITH REMOTE AMPLIFIER, SURFACE MOUNTED.
	OUTDOOR PAGING TRUMPET SOUND REPRODUCER, WITH REMOTE AMPLIFIER, SURFACE MOUNTED.
	TERMINAL CABINET FOR COMMUNICATIONS SYSTEM
F	FIRE ALARM STATION, MANUAL
F	FIRE ALARM BELL
F	FIRE ALARM HORN
F	FIRE ALARM COMBINATION STROBE/HORN
S	FIRE ALARM COMBINATION STROBE/SPEAKER, WALL MOUNT
FI	FIRE ALARM IONIZATION DETECTOR
I	AIR DUCT IONIZATION DETECTOR
FA	FIRE ALARM STATION, AUTOMATIC, HEAT DETECTOR

SYMBOL	DESCRIPTION
1	CONTACT - NORMALLY OPEN WITH NEMA SIZE INDICATED AS APPLICABLE
	CONTACT - NORMALLY CLOSED
	OVERLOAD RELAY HEATER
1	MAGNETIC STARTER WITH NEMA SIZE INDICATED
100/M	CIRCUIT BREAKER, MAGNETIC TRIP ONLY, FRAME SIZE SHOWN, 3 POLE UNLESS INDICATED OTHERWISE.
400	CIRCUIT BREAKER, THERMAL MAGNETIC TRIP SHOWN, 3 POLE UNLESS INDICATED OTHERWISE.
100	SWITCH - CURRENT RATING INDICATED, 3 POLE UNLESS INDICATED OTHERWISE.
225	FUSE - RATING INDICATED
	DRAWOUT CIRCUIT BREAKER, LOW VOLTAGE
	DRAWOUT CIRCUIT BREAKER, MEDIUM VOLTAGE
	DRAWOUT FUSED SWITCH, MEDIUM VOLTAGE
	SURGE ARRESTER
10	CAPACITOR - KVAR INDICATED
V VS 0-600V	METER WITH SWITCH - SCALE RANGE SHOWN
	GROUND
120V or 120/240V 15 KVA, 1PH	TRANSFORMER, SECONDARY VOLTAGES, PHASE AND RATING INDICATED AS APPLICABLE
GFR 25A 0.1	PICK-UP SETTING / TIME CURRENT CHARACTERISTIC } GROUND FAULT RELAY WITH CURRENT TRANSFORMER
	PUSH-BUTTON SWITCH, MOMENTARY CONTACT, NORMALLY OPEN
	PUSH-BUTTON SWITCH, MOMENTARY CONTACT, NORMALLY CLOSED
	PUSH BUTTON SWITCH, MAINTAINED CONTACTS WITH MECHANICAL INTERLOCK
	NORMALLY CLOSED, TIME DELAY OPENING
	NORMALLY CLOSED, TIME DELAY CLOSING
	NORMALLY OPEN, TIME DELAY CLOSED
	NORMALLY OPEN, TIME DELAY OPEN
	REMOTE DEVICE
O H A X00 00X	SELECTOR SWITCH - MAINTAINED CONTACT - CHART IDENTIFIES OPERATION:

CKT	POSITION HAND	OFF	AUTO
1	X	O	O
2	O	O	X

X - CLOSED CONTACT
O - OPEN CONTACT

(3)	CURRENT TRANSFORMER, NUMBER INDICATED
A	INDICATING LIGHT, PUSH-TO-TEST, LETTER INDICATES COLOR
A	INDICATING LIGHT - LETTER INDICATES COLOR A - AMBER G - GREEN B - BLUE R - RED C - CLEAR W - WHITE

ABBREVIATIONS

ABBREVIATIONS	DESCRIPTION
A	AMMETER, AMPERE, AMBER
AF	AMPERE FRAME
AFD	ADJUSTABLE FREQUENCY DRIVE
AFF	ABOVE FINISHED FLOOR
AFG	ABOVE FINISHED GRADE
AS	AMMETER SWITCH, AMPERE SENSOR
ASU	AIR SUPPLY UNIT
AT	AMPERE TRIP
ATC	AUTOMATIC THROWOVER CONTROL
ATS	AUTOMATIC TRANSFER SWITCH
BC	BARE COPPER
BRKR	BREAKER
C	CONDUIT, CONTACTOR
CB	CIRCUIT BREAKER
CC	CONTROL CABLE
CKT	CIRCUIT
CPT	CONTROL POWER TRANSFORMER
CR	CONTROL RELAY
CRE	CORROSION-RESISTANT
CRS	COATED RIGID STEEL CONDUIT
CT	CURRENT TRANSFORMER
DC	DIRECT CURRENT
DIV	DIVISION
DS	DISCONNECT SWITCH
E	EMPTY
EO	ELECTRIC OPERATOR
EQPT	EQUIPMENT
ESS	EMERGENCY SHUTDOWN SWITCH
ETM	ELAPSED TIME METER
EXST	EXISTING
FDR	FEEDER
F	FUSE
FLR	FLOOR
FLUOR	FLUORESCENT
FVNR	FULL VOLTAGE NON-REVERSING
FVR	FULL VOLTAGE REVERSING
G	GREEN, GROUND
GALV	GALVANIZED
GFCI	GROUND FAULT CIRCUIT INTERRUPTER
GFR	GROUND FAULT RELAY
GND	GROUND
H	HIGH SPEED
HH	HANDHOLE
HID	HIGH INTENSITY DISCHARGE
HPS	HIGH PRESSURE SODIUM
HS	HAND SWITCH
IC	INTERRUPTING CAPACITY
I &C	INSTRUMENTATION AND CONTROL
INCAND	INCANDESCENT
INST	INSTANTANEOUS
J, J-BOX	JUNCTION BOX
K	KEY INTERLOCK
L	LIGHTING CONTACTOR, LOW SPEED
LOS	LOCKOUT STOP PUSH BUTTON
LR	LATCHING RELAY
LT FLEX	LIQUID TIGHT FLEX CONDUIT
LTS	LIGHTS

ABBREVIATIONS	DESCRIPTION
M	MAGNETIC CONTACTOR COIL
MCC	MOTOR CONTROL CENTER
MH	MANHOLE, METAL HALIDE
MO	MOTOR OPERATOR
MS	MOTOR STARTER
MT	MOUNT
MTD	MOUNTED
N	NEUTRAL
NA	NON-AUTOMATIC
NC	NORMALLY CLOSED
NL	NIGHT LIGHT
NO	NORMALLY OPEN
NP	NAMEPLATE
OC	ON CENTER
OL	OVERLOAD RELAY
PB	PULL BOX, PUSH BUTTON SWITCH
PC	PHOTOCELL
PH	PHASE
PMR	PHASE MONITOR RELAY
PNL	PANEL
PS	PRESSURE SWITCH
PT	POTENTIAL TRANSFORMER
PVC	POLYVINYL CHLORIDE CONDUIT
R	RED
RCPT	RECEPTACLE
REQD	REQUIRED
RM	REMOTE MULTIPLEXER
RS	RIGID STEEL CONDUIT
RT	REMOTE TELEMETRY
RVNR	REDUCED VOLTAGE NON-REVERSING
RVR	REDUCED VOLTAGE REVERSING
SA	SURGE ARRESTOR
SCCR	SHORT CIRCUIT CURRENT RATING
S/N	SOLID NEUTRAL
SPD	SPEED
SST	STAINLESS STEEL
SV	SOLENOID VALVE
SW	SWITCH
T	THERMOSTAT
TB	TERMINAL BOARD
TC	TIME CLOSE
TD	TEMPERATURE DETECTOR RELAY
TDR	TIME DELAY RELAY
TJB	TERMINAL JUNCTION BOX
T.O.	TIME OPEN
TS	AUTO TRANSFORMER TEMPERATURE SWITCH
TSP	TWISTED SHIELDED PAIR
TST	TWISTED SHIELDED TRIAD
TYP	TYPICAL
UH	UNIT HEATER
UVR	UNDER VOLTAGE RELAY
V	VOLTMETER, VOLT
VS	VOLTMETER SWITCH
W	WATT
WHD	WATTHOUR DEMAND METER
WP	WEATHERPROOF
XFDR	TRANSDUCER
XFMR	TRANSFORMER
XFPR	TRANSPONDER

NOTES:
1. THIS IS A STANDARD LEGEND SHEET. SOME SYMBOLS OR ABBREVIATIONS MAY APPEAR ON THIS DRAWING AND NOT ON THE PLANS.
2. FOR ADDITIONAL ABBREVIATIONS OF OTHER DIVISIONS (HVAC, MECHANICAL, AND STRUCTURAL/ARCHITECTURAL), SEE OTHER LEGENDS.

© CH2M HILL
THIS DOCUMENT, AND THE IDEAS AND DESIGNS INCORPORATED HEREIN, AS AN INSTRUMENT OF PROFESSIONAL SERVICE, IS THE PROPERTY OF CH2M HILL AND IS NOT TO BE USED, IN WHOLE OR IN PART, FOR ANY OTHER PROJECT WITHOUT THE WRITTEN AUTHORIZATION OF CH2MHILL.
REUSE OF DOCUMENTS:

DSGN	B. PIEPER						VERIFY SCALE
DR	E. ARMIJO						BAR IS ONE INCH ON ORIGINAL DRAWING. 0 1" IF NOT ONE INCH ON THIS SHEET, ADJUST SCALES ACCORDINGLY.
CHK	G. KOPPELMANN						
APVD	M. GROSS	NO.	DATE	REVISION	BY	APVD	

Sdg inc. CH2MHILL

BLOOMFIELD, NEW MEXICO
WATER TREATMENT PLANT UPGRADE

ELECTRICAL

ELECTRICAL LEGEND

SHEET	39 OF 47
DWG	70-E-1
DATE	05/04/2006
PROJ	342630

FILENAME: 70_70E1d_342630.dgn PLOT DATE: 28-JUNE-2006 PLOT TIME: 00:00:00

GENERAL CIRCUIT CONDUCTOR AND CONDUIT IDENTIFICATION

ANALOG CIRCUIT CALLOUTS	
TAG	DESCRIPTION
[A1]	[3/4"C,1 TYPE3]
[A2]	[1"C,2 TYPE3]
[A3]	[1"C,3 TYPE3]
[A4]	[1"C,4 TYPE3]
[A5]	[1 1/4"C,5 TYPE3]
[A6]	[1 1/4"C,6 TYPE3]
[A7]	[1 1/2"C,7 TYPE3]
[A8]	[1 1/2"C,8 TYPE3]
[A9]	[1 1/2"C,9 TYPE3]
[A10]	[2"C,10 TYPE3]
[A11]	[2"C,11 TYPE3]
[A12]	[2"C,12 TYPE3]
[A13]	[2"C,13 TYPE3]
[A14]	[2"C,14 TYPE3]
[A15]	[3/4"C,1 TYPE 4]
[A16]	[3/4"C,2 TYPE 4]
[A17]	[1"C,3 TYPE 4]
[A18]	[1 1/4"C,4 TYPE 4]
[A19]	[1"C,1 CAT 5 CABLE]

PROFIBUS CABLES	
TAG	DESCRIPTION
[PPA]	[3/4"C,1 TYPE 34]
[PDP1]	[3/4"C,1 TYPE 35]
[PDP2]	[3/4"C,2 TYPE 35]

CONTROL CIRCUIT CALLOUTS	
TAG	DESCRIPTION
[C1]	[3/4"C,MSC]
[C2]	[3/4"C,2#12,1#12G]
[C3]	[3/4"C,3#14,1#14G]
[C4]	[3/4"C,4#14,1#14G]
[C5]	[3/4"C,5#14,1#14G]
[C6]	[3/4"C,6#14,1#14G]
[C7]	[3/4"C,7#14,1#14G]
[C8]	[3/4"C,8#14,1#14G]
[C9]	[3/4"C,9#14,1#14G]
[C10]	[3/4"C,10#14,1#14G]
[C11]	[3/4"C,11#14,1#14G]
[C12]	[3/4"C,12#14,1#14G]
[C13]	[3/4"C,13#14,1#14G]
[C14]	[3/4"C,14#14,1#14G]
[C15]	[3/4"C,15#14,1#14G]
[C16]	[3/4"C,16#14,1#14G]
[C17]	[3/4"C,17#14,1#14G]
[C18]	[3/4"C,18#14,1#14G]
[C19]	[3/4"C,19#14,1#14G]
[C20]	[3/4"C,20#14,1#14G]
[C21]	[3/4"C,21#14,1#14G]
[C22]	[3/4"C,22#14,1#14G]
[C23]	[3/4"C,23#14,1#14G]
[C24]	[1"C,24#14,1#14G]
[C25]	[1"C,25#14,1#14G]

POWER CIRCUIT CALLOUTS	
TAG	DESCRIPTION
[B1]	[3/4"C,MSC]
[B2]	[3/4"C,2#12,1#12G]
[B3]	[3/4"C,3#12,1#12G]
[B4]	[3/4"C,4#12,1#12G]
[B5]	[3/4"C,5#12,1#12G]
[B6]	[3/4"C,6#12,1#12G]
[B7]	[3/4"C,7#12,1#12G]
[B8]	[3/4"C,8#12,1#12G]
[B9]	[3/4"C,3#12,2#14,1#12G]
[B10]	[3/4"C,3#12,3#14,1#12G]
[B11]	[3/4"C,3#12,4#14,1#12G]
[B12]	[3/4"C,3#12,5#14,1#12G]
[B13]	[3/4"C,3#12,6#14,1#12G]
[B14]	[3/4"C,3#12,7#14,1#12G]
[B15]	[3/4"C,2#10,1#10G]
[B16]	[3/4"C,3#10,1#10G]
[B17]	[3/4"C,3#10,2#14,1#10G]
[B18]	[3/4"C,3#10,3#14,1#10G]
[B19]	[3/4"C,3#10,4#14,1#10G]
[B20]	[3/4"C,3#10,5#14,1#10G]
[B21]	[1"C,2#8,1#10G]
[B22]	[1"C,3#8,1#10G]
[B23]	[1"C,3#8,2#14,1#10G]
[B24]	[1"C,3#8,3#14,1#10G]
[B25]	[1"C,3#8,4#14,1#10G]
[B26]	[1"C,3#8,5#14,1#10G]
[B27]	[1"C,2#6,1#10G]
[B28]	[1"C,3#6,1#10G]
[B29]	[1"C,3#6,2#14,1#10G]
[B30]	[1"C,3#6,3#14,1#10G]
[B31]	[1"C,3#6,4#14,1#10G]
[B32]	[1"C,3#6,5#14,1#10G]
[B33]	[1"C,3#4,1#8G]
[B34]	[1 1/4"C,3#4,3#14,1#8G]
[B35]	[1 1/4"C,3#4,5#14,1#8G]
[B36]	[1 1/4"C,3#3,1#8G]
[B37]	[1 1/4"C,3#3,3#14,1#8G]
[B38]	[1 1/4"C,3#2,1#6G]
[B39]	[1 1/4"C,3#1,1#6G]
[B40]	[1 1/2"C,3#1,3#14,1#6G]
[B41]	[1 1/2"C,3#2/0,1#6G]
[B42]	[2"C,3#3/0,1#4G]
[B43]	[2"C,3#4/0,1#4G]

EMPTY CONDUIT	
TAG	DESCRIPTION
[CE]	[3/4"C, WITH PULL STRING]
[MC]	MANUFACTURER'S CABLE

GENERAL ELECTRICAL CONSTRUCTION NOTES

1. APPLICATION: THESE PROVISIONS APPLY TO ALL WORK GENERALLY, UNLESS OTHERWISE SPECIFIED BY SPECIFIC NOTE OR REFERENCE.
2. ELECTRICAL INSTALLATION CONDITIONS: FOR REQUIREMENTS, SEE SPECIFICATION SECTION 16010, AREA DESIGNATIONS.
3. ANALYZE THE REQUIREMENTS FOR ROUTING EACH RACEWAY AND INSTALL ACCORDING TO THE SPECIFICATIONS. WHERE SPECIFIC ROUTING RIGHTS-OF-WAY (R.O.W.) ARE SHOWN, ROUTING OF RACEWAYS SHALL CONFORM TO THOSE CORRIDORS UNLESS ALLOWED OTHERWISE. WHERE ACCESS, CONSTRUCTABILITY, OR COORDINATION WITH OTHER ELEMENTS OF THE WORK SUGGESTS THAT AN ALTERNATE ROUTING BE CONSIDERED, SUBMIT THAT ALTERNATE PLAN FOR APPROVAL.
4. DEMOLITION: REFER TO SPECIFICATIONS FOR DETAILED REQUIREMENTS. RETAIN AND PROTECT ALL EXISTING CIRCUITS, RACEWAYS, HANDHOLES, MANHOLES, AND EQUIPMENT UNLESS SPECIFICALLY IDENTIFIED FOR DEMOLITION ON THE SITE OR FACILITY DEMOLITION PLANS. MAINTAIN ALL CIRCUITS IN CONTINUOUS OPERATION UNLESS OTHERWISE SHOWN OR SPECIFIED. ANY INTERRUPTION OF NORMAL OPERATION SHALL BE APPROVED BY AND COORDINATED WITH THE OWNER.
5. SUPPLY LATERAL LOAD CALCULATIONS FOR PROJECTS IN SEISMIC ZONES 2 OR GREATER. CALCULATIONS FOR VERTICAL SUPPORTS AND SEISMIC BRACING SHALL BE STAMPED BY A PROFESSIONAL ENGINEER, REGISTERED IN THE STATE OF THE PROJECT.
6. DESIGN OF SUPPORTS AND BRACES SHALL BE BASED ON THE CRITERIA STATED IN THE GENERAL STRUCTURAL NOTES FOR THE PROJECT, AND SHALL CONFORM TO THE REQUIREMENTS OF THE 1997 UNIFORM BUILDING CODE. THE NOTES ARE LOCATED ON THE DRAWINGS.
7. ON SHOP DRAWINGS AND SUPPORTING CALCULATIONS, IDENTIFY AND LOCATE EACH OF THE SUPPORTS, HANGERS, BRACES, ANCHORS, GUIDES AND COMPONENTS BY CATALOG NUMBER.
8. ALL ELECTRICAL EQUIPMENT SHALL BE INSTALLED IN ACCORDANCE WITH THE STANDARD ELECTRICAL DETAILS LOCATED ON THE DRAWINGS UNLESS OTHERWISE SPECIFIED BY SPECIFIC NOTE OR REFERENCE.

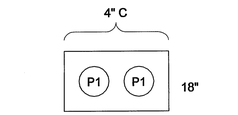

DUCTBANK A
NTS 18" X 18" BLOCKOUT 70-E-3

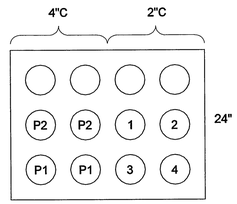

DUCTBANK B
NTS 24" X 24" BLOCKOUT 70-E-3

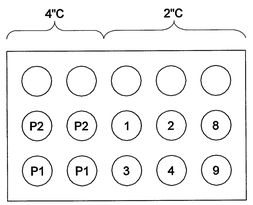

DUCTBANK C
NTS 70-E-3

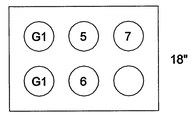

DUCTBANK D
NTS 18" X 18" BLOCKOUT 70-E-3

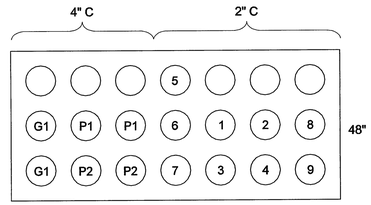

DUCTBANK E
NTS 72" X 48" BLOCKOUT 70-E-3

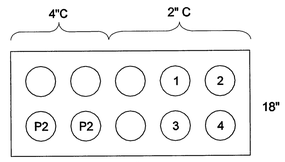

DUCTBANK F
NTS 18" X 18" BLOCKOUT 70-E-3

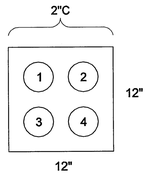

DUCTBANK G
NTS 12" X 12" BLOCKOUT 70-E-3

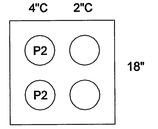

DUCTBANK H
NTS 18" X 18" BLOCKOUT 70-E-3

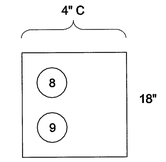

DUCTBANK J
NTS 18" X 18" BLOCKOUT 70-E-3

SITE CIRCUIT AND RACEWAY SCHEDULE

CIRCUIT	CONDUCTORS	SOURCE	DESTINATION
P1	3 #500KCM, 1 #500KCM N EA	PDMT XFMR	MCC-1
P2	3 #4/0, 1 #2 G EA	MCC-1	EXIST MDP XFMR
G1	FUTURE	ENGINE GENERATOR	MCC-1
1	3 #3, 1 #8 G	MCC-1	BWP-01
2	3 #3, 1 #8 G	MCC-1	BWP-02
3	9 #14	MCC-1	BWP-01
	9 #14		BWP-02
4	3 #12, 1 #12 G	MCC-1	EUH-1
	2 #12, 1 #12 G	LP-1, CKT 3	EF-3
	2 #12, 1 #12 G	LP-1, CKT 5	LTG & RCPT
5	2 #10, 1 #10G	LP-1, CKTS 2,4	GEN BLK HTRS
	2 #10, 1 #10G	LP-1, CKTS 6,8	GEN BLK HTRS
6	2 #12, 1#12G	LP-1, CKT 10	GEN CNTL PNL
	2 #10, 1 #10G	LP-1, CKTS 12,14	GEN BTRY HTRS
7	6 #14	ATS	GEN CNTL PNL
8	2 #12, 1 #12 G	LP-1	FE/FIT-009
9	1 TYPE 3, #16 TSP	PLC	FE/FIT-009

NOTES:
1. FOR DUCTBANK CONSTRUCTION, SEE (16400) .
2. ALL UNLABELED CONDUITS ARE SPARES AND SHALL BE INSTALLED FOR FUTURE USE. FOR TERMINATION REQUIREMENTS SEE DWG 70-E-3.

RECORD DRAWINGS

Revisions Drawn by EJA Date 11/2007

THESE RECORD DRAWINGS HAVE BEEN PREPARED, IN PART, ON THE BASIS OF INFORMATION COMPILED BY OTHERS. THEY ARE NOT INTENDED TO REPRESENT IN DETAIL THE EXACT LOCATION, TYPE OF COMPONENT NOR MANNER OF CONSTRUCTION. THE ENGINEER WILL NOT BE RESPONSIBLE FOR ANY ERRORS OR OMISSIONS WHICH HAVE BEEN INCORPORATED INTO THE RECORD DRAWINGS.

THESE DRAWINGS WERE MODIFIED USING AUTOCAD AND REPLOTTED FOR RECORD PURPOSES AND THEREFORE DO NOT HAVE THE ENGINEER'S STAMP OR OTHER SIGNATURES THAT APPEAR ON THE ORIGINAL CONTRACT DRAWINGS.

DSGN	B. PIEPER
DR	E. ARMIJO
CHK	G. KOPPELMANN
APVD	M. GROSS

NO.	DATE	REVISION	BY	APVD

VERIFY SCALE
BAR IS ONE INCH ON ORIGINAL DRAWING. 0 1"
IF NOT ONE INCH ON THIS SHEET, ADJUST SCALES ACCORDINGLY.

Sdg Inc. CH2MHILL

BLOOMFIELD, NEW MEXICO
WATER TREATMENT PLANT
UPGRADE

ELECTRICAL
ELECTRICAL NOTES, CIRCUIT/CONDUCTOR TABLE AND SITE CIRCUIT RECOVERY SCHEDULE AND DUCTBANK SECTIONS

SHEET	40 OF 47
DWG	70-E-2
DATE	05/04/2006
PROJ	342630

FILENAME: 70_70E2d_342630.dgn PLOT DATE: 28-JUNE-2006 PLOT TIME: 00:00:00

© CH2M HILL
THIS DOCUMENT, AND THE IDEAS AND DESIGNS INCORPORATED HEREIN, AS AN INSTRUMENT OF PROFESSIONAL SERVICE, IS THE PROPERTY OF CH2M HILL AND IS NOT TO BE USED, IN WHOLE OR IN PART, FOR ANY OTHER PROJECT WITHOUT THE WRITTEN AUTHORIZATION OF CH2M HILL
REUSE OF DOCUMENTS:

EAST BLANCO BLVD.

EXOTHERMIC WELD (TYPICAL ALL)

EXTEND GROUND RING INTO BUILDING AND BOND TO FILTER EQUIPMENT SKID, TYP 2 PLCS

5'-0" MINIMUM

BOND STEEL SUPPORT BEAMS OF NEW BUILDING TO GROUND RING. LOCATIONS OF CONNECTION ARE APPROXIMATE

NEW FILTER BUILDING, SEE DWGS 70-E-7 & 8

#4/0 BARE COPPER

BURIED 3'-0" DEEP, TYP.

TIE TO SLAB REBAR

MCC-1, SEE DWG 70-E-4

5/8" X 10'-0" GROUND ROD, TYP

AUTOMATIC TRANSFER SWITCH (ATS)

STUB 1-4"C 4' FROM BUILDING AND CAP FOR FUTURE USE

E 70-E-2

EMH-2

D 70-E-2

[3\4"C, 2#12, 1#12G]
[3/4"C, 1TYPE3]

INSTRUMENT AIT-019

C 70-E-2

4 REFER TO 10-M-4 FOR TURBIDIMETER INDSTALLATION

12" PVC

12" PVC

8"W

12"W

ROUTE 2-2" SPARE CONDUITS TO BLDG AND EXTEND 12" ABOVE FINISHED GRADE AND CAP FOR FUTURE USE

NEW BACKWASH SUPPLY-PUMP STATION SEE DWG 70-E-6

SEE NOTE 3

H 70-E-2

G 70-E-2

EXIST MDP

EXIST 330KVA TRANSFORMER

EMH-3

F 70-E-2

EXISTING 300kVA UTILITY TRANSFORMER, SEE NOTE 2

NEW TRANSFORMER, NOTE 1

A 70-E-2

INSTALL GROUND RODS AND RING AROUND NEW TRANSFORMER AS SHOWN. BOND NEW TRANSFORMER NEUTRAL TO RING ON PRIMARY AND SECONDARY SIDE

NEW UTILITY SERVICE DROP

2"GAS

CP

B 70-E-2

EMH-1

J 70-E-2

BACKWASH SUPPLY METER VAULT

RECORD DRAWINGS

Revisions Drawn by EJA Date 11/2007

THESE RECORD DRAWINGS HAVE BEEN PREPARED, IN PART, ON THE BASIS OF INFORMATION COMPILED BY OTHERS. THEY ARE NOT INTENDED TO REPRESENT IN DETAIL THE EXACT LOCATION, TYPE OF COMPONENT NOR MANNER OF CONSTRUCTION. THE ENGINEER WILL NOT BE RESPONSIBLE FOR ANY ERRORS OR OMISSIONS WHICH HAVE BEEN INCORPORATED INTO THE RECORD DRAWINGS.

NOTES:

1. NEW TRANSFORMER BY UTILITY. CONTRACTOR SHALL COORDINATE LOCATION OF NEW TRANSFORMER WITH EXISTING SITE UTILITIES. CONTRACTOR SHALL BE RESPONSIBLE FOR SITE PREPARATION AND PAD INSTALLATION PER FARMINGTON ELECTRIC UTILITY INSTALLATION DETAILS.
2. EXISTING UTILITY TRANSFORMER SHALL BE DISCONNECTED AFTER NEW TRANSFORMER HAS BEEN INSTALLED AND ENERGIZED AND AFTER MCC-1 HAS BEEN CONNECTED AND IS OPERATIONAL.
3. EXTEND NEW CONDUITS TO EXISTING 400 AMP FUSED DISCONNECT PRIOR TO DISCONNECTING EXISTING UTILITY FEED AND TRANSFORMER. NEW FEEDER CONDUCTORS SHALL BE CONNECTED TO THE LINE SIDE OF EXIST DISCONNECT IMMEDIATELY AFTER EXISTING FEEDERS ARE DISCONNECTED AND REMOVED. EXISTING SECONDARY CONDUITS AND CONDUCTORS SHALL BE REMOVED AND DISPOSED OF PROPERLY.

ELECTRICAL LAYOUT PLAN

1" = 10'

©CH2M HILL

REUSE OF DOCUMENTS: THIS DOCUMENT, AND THE IDEAS AND DESIGNS INCORPORATED HEREIN, AS AN INSTRUMENT OF PROFESSIONAL SERVICE, IS THE PROPERTY OF CH2M HILL AND IS NOT TO BE USED, IN WHOLE OR IN PART, FOR ANY OTHER PROJECT WITHOUT THE WRITTEN AUTHORIZATION OF CH2MHILL.

THESE DRAWINGS WERE MODIFIED USING AUTOCAD AND REPLOTTED FOR RECORD PURPOSES AND THEREFORE DO NOT HAVE THE ENGINEER'S STAMP OR OTHER SIGNATURES THAT APPEAR ON THE ORIGINAL CONTRACT DRAWINGS.

DSGN	B. PIEPER
DR	E. ARMIJO
CHK	G. KOPPELMANN
APVD	M. GROSS

NO.	DATE	REVISION	BY	APVD
1	6/28/06	ADDENDUM 2	WP	MG

VERIFY SCALE
BAR IS ONE INCH ON ORIGINAL DRAWING.
0 1"
IF NOT ONE INCH ON THIS SHEET, ADJUST SCALES ACCORDINGLY.

Sdg inc. CH2MHILL

BLOOMFIELD, NEW MEXICO
WATER TREATMENT PLANT
UPGRADE

ELECTRICAL
-
SITE PLAN
-

SHEET	41 OF 47
DWG	70-E-3
DATE	MAY 2006
PROJ	342630

FILENAME: 70_70E3d_342630.dwg PLOT DATE: 28-Jun-2006 PLOT TIME: 14:31:38

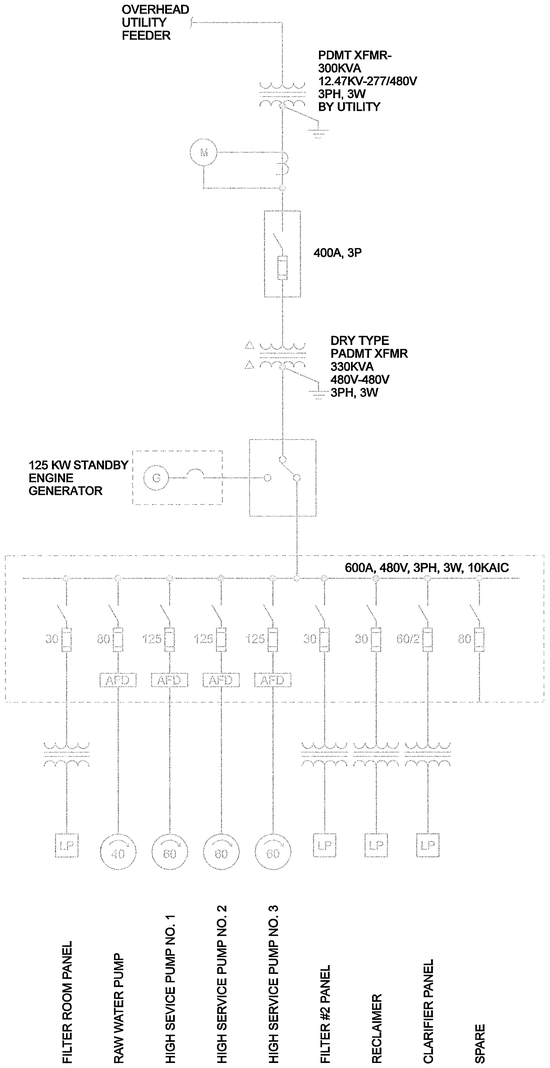

EXISTING OVERALL SYSTEM ONE-LINE

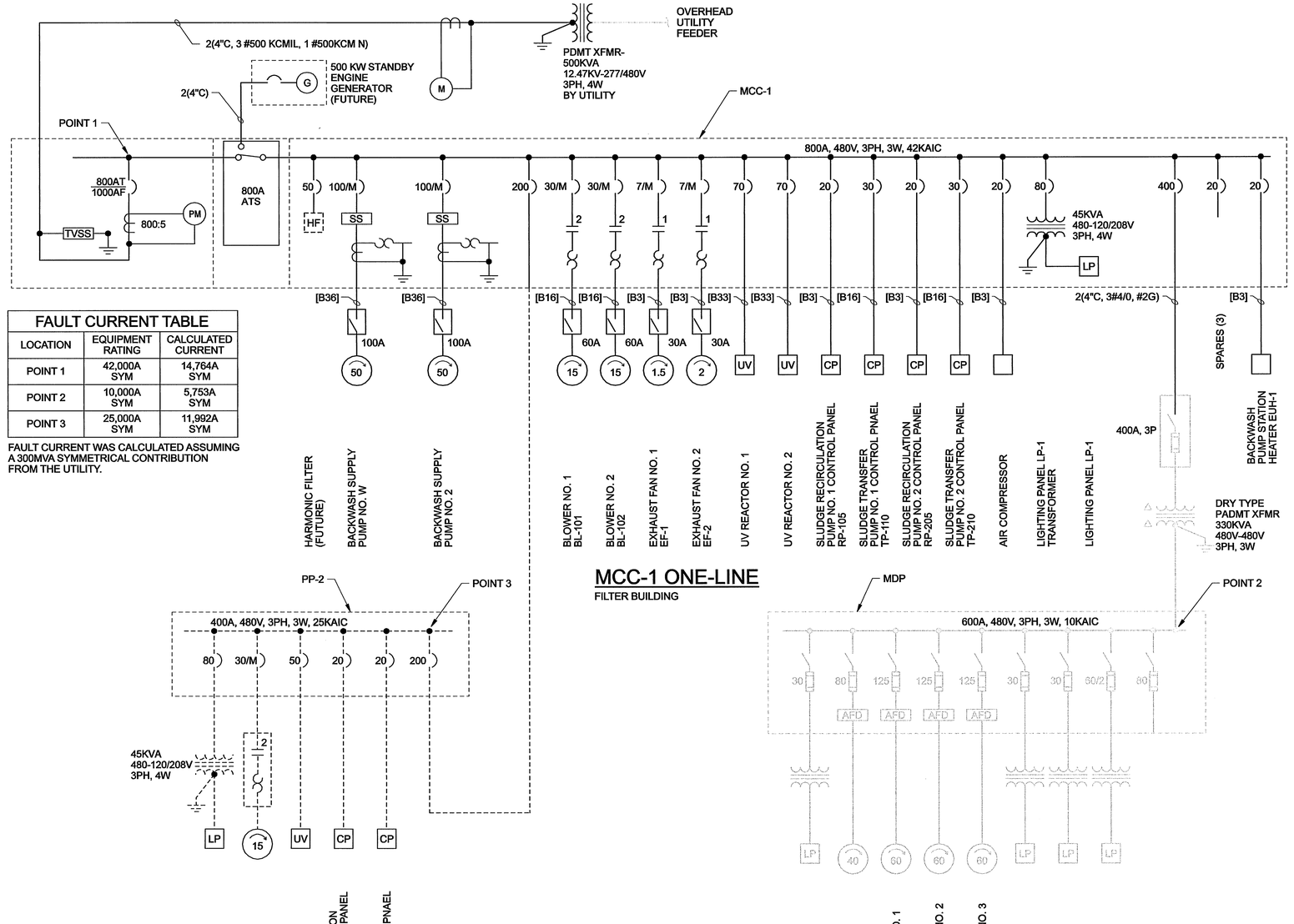

MCC-1 ONE-LINE

FILTER BUILDING

FAULT CURRENT TABLE		
LOCATION	EQUIPMENT RATING	CALCULATED CURRENT
POINT 1	42,000A SYM	14,764A SYM
POINT 2	10,000A SYM	5,753A SYM
POINT 3	25,000A SYM	11,992A SYM

FAULT CURRENT WAS CALCULATED ASSUMING A 300MVA SYMMETRICAL CONTRIBUTION FROM THE UTILITY.

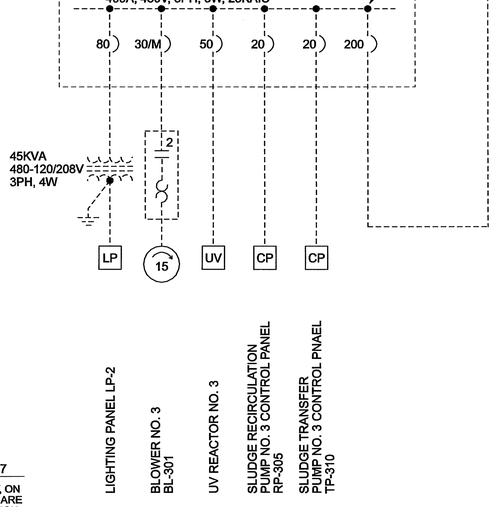

FUTURE POWER PANEL PP-2 ONE-LINE

FILTER PLANT NO. 3 (FUTURE)

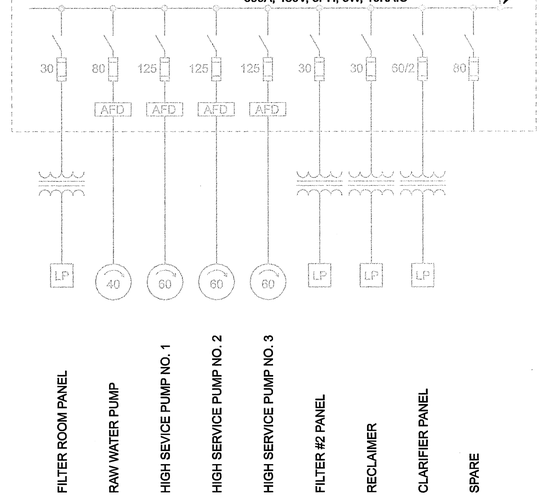

EXISTING MDP ONE-LINE

RECORD DRAWINGS

Revisions Drawn by EJA Date 11/2007

THESE RECORD DRAWINGS HAVE BEEN PREPARED, IN PART, ON THE BASIS OF INFORMATION COMPILED BY OTHERS. THEY ARE NOT INTENDED TO REPRESENT IN DETAIL THE EXACT LOCATION, TYPE OF COMPONENT NOR MANNER OF CONSTRUCTION. THE ENGINEER WILL NOT BE RESPONSIBLE FOR ANY ERRORS OR OMISSIONS WHICH HAVE BEEN INCORPORATED INTO THE RECORD DRAWINGS.

THESE DRAWINGS WERE MODIFIED USING AUTOCAD AND REPLOTTED FOR RECORD PURPOSES AND THEREFORE DO NOT HAVE THE ENGINEER'S STAMP OR OTHER SIGNATURES THAT APPEAR ON THE ORIGINAL CONTRACT DRAWINGS.

DSGN	B. PIEPER
DR	E. ARMIJO
CHK	G. KOPPELMANN
APVD	M. GROSS

NO.	DATE	REVISION	BY	APVD

VERIFY SCALE

BAR IS ONE INCH ON ORIGINAL DRAWING. 0 1"

IF NOT ONE INCH ON THIS SHEET, ADJUST SCALES ACCORDINGLY.

Sdg Inc. CH2MHILL

BLOOMFIELD, NEW MEXICO
WATER TREATMENT PLANT
UPGRADE

ELECTRICAL
EXISTING AND FUTURE
OVERALL ONE-LINE
DIAGRAMS

SHEET	42 OF 47
DWG	70-E-4
DATE	05/04/2006
PROJ	342630

FILENAME: 70_70E4d_342630.dgn PLOT DATE: 28-JUNE-2006 PLOT TIME: 00:00:00

REUSE OF DOCUMENTS: THIS DOCUMENT, AND THE IDEAS AND DESIGNS INCORPORATED HEREIN, AS AN INSTRUMENT OF PROFESSIONAL SERVICE, IS THE PROPERTY OF CH2M HILL AND IS NOT TO BE USED, IN WHOLE OR IN PART, FOR ANY OTHER PROJECT WITHOUT THE WRITTEN AUTHORIZATION OF CH2MHILL.

©CH2M HILL

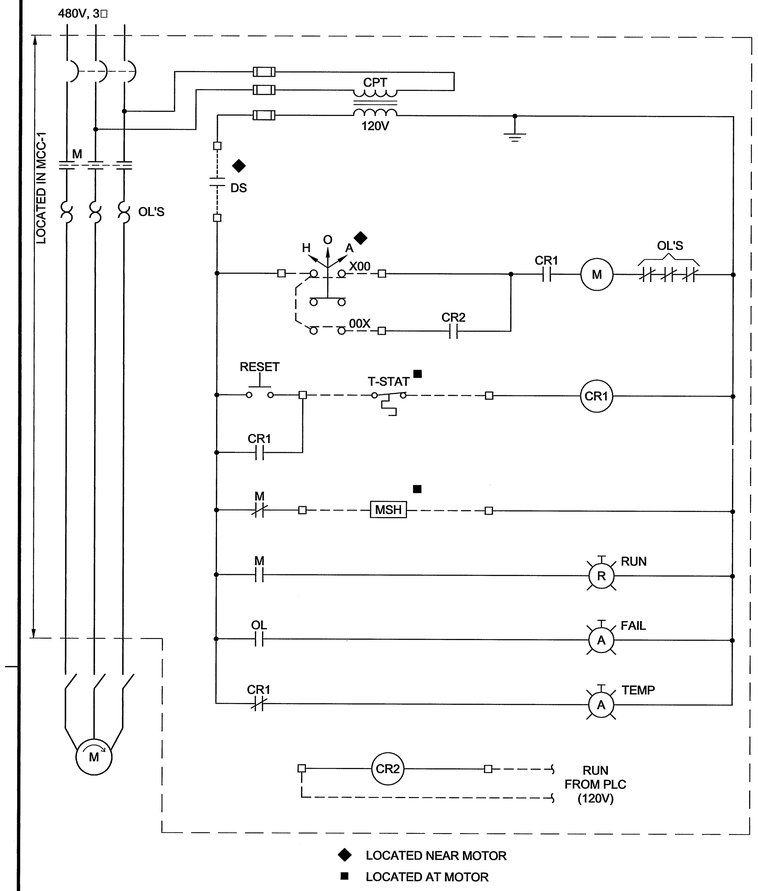

BACKWASH SUPPLY PUMP

BWP-01, BWP-02

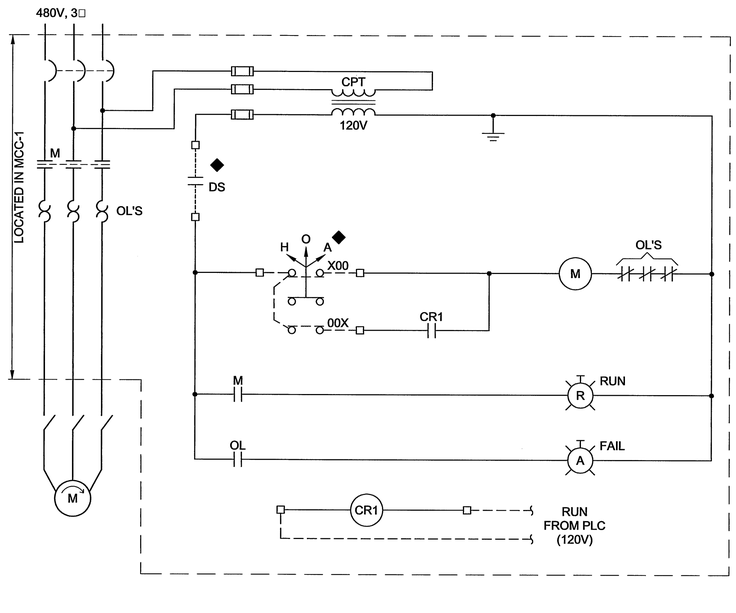

AIR SUPPLY BLOWER

BL-101, BL-201

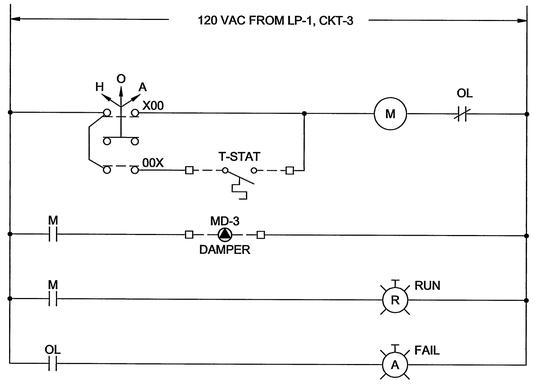

EXHAUST FAN EF-3

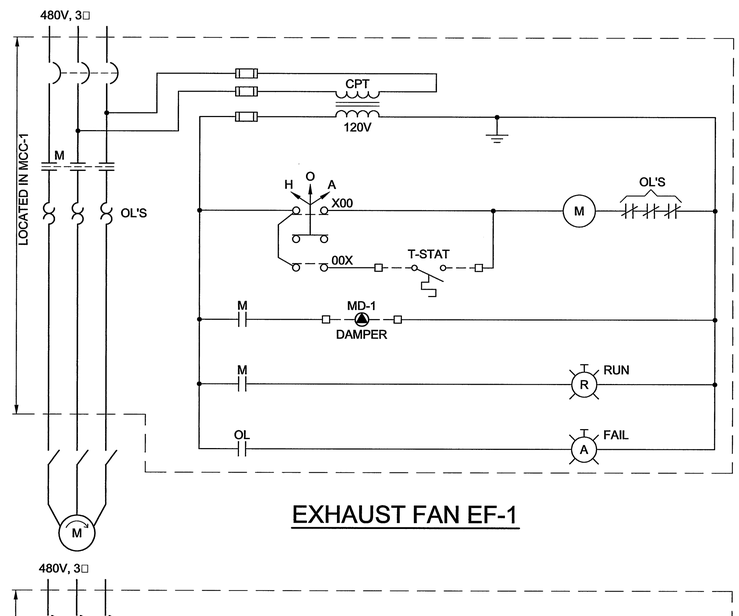

EXHAUST FAN EF-1

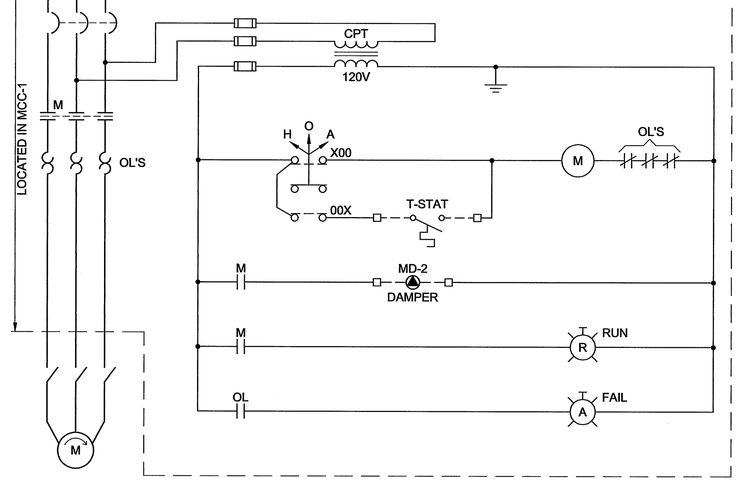

EXHAUST FAN EF-2

RECORD DRAWINGS

Revisions Drawn by EJA Date 11/2007

THESE RECORD DRAWINGS HAVE BEEN PREPARED, IN PART, ON THE BASIS OF INFORMATION COMPILED BY OTHERS. THEY ARE NOT INTENDED TO REPRESENT IN DETAIL THE EXACT LOCATION, TYPE OF COMPONENT NOR MANNER OF CONSTRUCTION. THE ENGINEER WILL NOT BE RESPONSIBLE FOR ANY ERRORS OR OMISSIONS WHICH HAVE BEEN INCORPORATED INTO THE RECORD DRAWINGS.

THESE DRAWINGS WERE MODIFIED USING AUTOCAD AND REPLOTTED FOR RECORD PURPOSES AND THEREFORE DO NOT HAVE THE ENGINEER'S STAMP OR OTHER SIGNATURES THAT APPEAR ON THE ORIGINAL CONTRACT DRAWINGS.

DSGN	A. FRIEDT
DR	E. ARMIJO
CHK	
APVD	

NO.	DATE	REVISION	BY	APVD

VERIFY SCALE
BAR IS ONE INCH ON ORIGINAL DRAWING.
0 1"
IF NOT ONE INCH ON THIS SHEET, ADJUST SCALES ACCORDINGLY.

Sdg inc. CH2MHILL

BLOOMFIELD, NEW MEXICO
WATER TREATMENT PLANT
UPGRADE

ELECTRICAL

MOTOR CONTROL DIAGRAMS

SHEET	43 OF 47
DWG	70-E-5
DATE	JUNE 2006
PROJ	342630

FILENAME: 70_70E5d_342630.dwg PLOT DATE: 28-Jun-2006 PLOT TIME: 14:30:03

© CH2M HILL
THIS DOCUMENT, AND THE IDEAS AND DESIGNS INCORPORATED HEREIN, AS AN INSTRUMENT OF PROFESSIONAL SERVICE, IS THE PROPERTY OF CH2M HILL AND IS NOT TO BE USED, IN WHOLE OR IN PART, FOR ANY OTHER PROJECT WITHOUT THE WRITTEN AUTHORIZATION OF CH2MHILL.
REUSE OF DOCUMENTS:

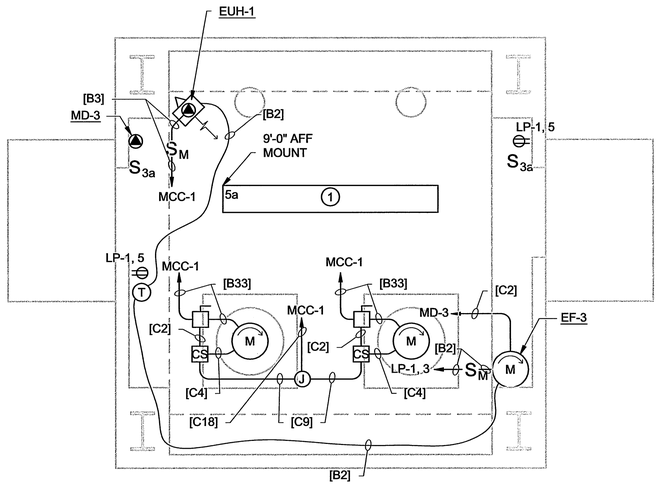

NOTES:

1. ROUTE ALL CIRCUITS TO NORTH WALL OF PUMP STATION FOR CONTINUATION TO DUCTBANK. FURNISH AND INSTALL JUNCTION BOXES AS REQUIRED FOR COMBINING CIRCUITS.
2. ALL LIGHTING AND RECEPTACLE CIRCUITS SHALL CONSIST OF 2#12G, 1#12G, MIN. UNLESS NOTED OTHERWISE.
3. SEE DRAWINGS 70-E-2 AND 70-E-3 FOR DUCTBANK ROUTING AND CIRCUITING REQUIREMENTS.

BACKWASH SUPPLY PUMP STATION PROCESS AND FACILITY PLAN

3/8" = 1'-0"

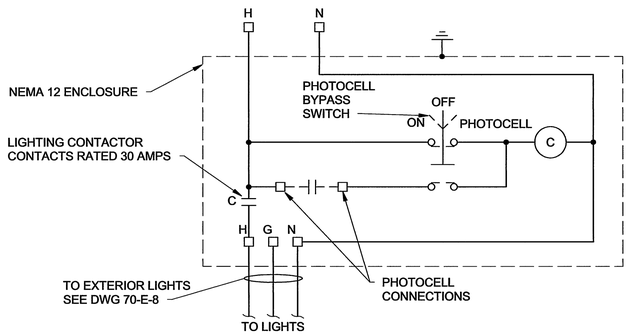

LIGHTING CONTACTOR LC-1

LUMINAIRE SCHEDULE

FIXTURE NUMBER	FIXTURE TYPE	OPERATING VOLTAGE	DESCRIPTION	MANUFACTURER NAME	MANUFACTURER NUMBER	LAMP QUANTITY	LAMP TYPE	MOUNTING
(1)	FLUOR	120	ENCLOSED AND GASKETED, 8' FIBERGLASS, HIGH OUTPUT FLUORESCENT, DAMP LOCATION	LITHONIA	DM 96HO AR 120 GEB	2	F96T12HO	PENDANT, HEIGHT AS NOTED
H2	HID	120	HID WALL PACK AREA LIGHT WITH CLEAR POLYCARBONATE LENS, CUTOFF DISTRIBUTION	LITHONIA	TWAC 70M 120 LPI	1	MC70M/CU	WALL, HEIGHT AS NOTED
⊗	INCAND	120	EXIT LIGHT WITH INTEGRAL EMERGENCY LIGHTS, 72W, 1/2 HOUR CAPACITY W/BATTERY	LITHONIA	HQM 672 SW3R 120 H1206	2 EXIT	15T6	WALL, 1'-0" ABOVE DOOR
						2 EM	12W	

SCHEDULE FOR PANEL LP-1

Voltage & Phase	120 / 208 V. 3 Ø 4 - Wire	Main Breaker Amp Rating	100	AIC Rating	10,000
Neutral	Yes	Bus Amp Rating	225	Mounting	INTERNAL
No. of Circuits	42	Bus Bars	COPPER	Trim	
Fed From	MCC-1	Ground Bus	yes	Mfg.	
		Location	MCC-1	Feed	
NOTES:		NEMA Enclosure	12		

DESCRIPTION	VA	TYPE	BKR	CKT	PHASE	CKT	BKR	TYPE	VA	DESCRIPTION	
~~GUH-3 (BWPS)~~ SPARE	480	O	20A/1P	1	A	2	20A/2P	O	1080	~~GENERATOR BLOCK HEATERS~~	SPARE
EF-3 (BWPS)	600	M	20A/1P	3	B	4	---	O	1080	---	SPARE
LTG & RCPT (BWPS)	620	O	20A/1P	5	C	6	20A/2P	O	1080	~~GENERATOR BLOCK HEATERS~~	SPARE
INTERIOR LTG	1655	L	20A/1P	7	A	8	---	O	1080	---	SPARE
INTERIOR LTG	1650	L	20A/1P	9	B	10	20A/2P	O	840	~~GENERATOR BATTERY HTRS~~	SPARE
INTERIOR LTG	1655	L	20A/1P	11	C	12	---	O	840	---	SPARE
INTERIOR RCPT	720	R	20A/1P	13	A	14	20A/1P	O	600	GENERATOR CONTROL PANEL	
INTERIOR RCPT	720	R	20A/1P	15	B	16	20A/1P	O	720	GUH-1, GUH-2, GUH-3	
EXTERIOR LTG (LC-1)	810	L	20A/1P	17	C	18	20A/1P	O	960	MASTER PLC	
EXTERIOR RCPT	360	R	20A/1P	19	A	20	20A/1P	O	1200	~~SLAVE #1 PLC~~	
~~EXTERIOR RCPT~~ SPARE	540	R	20A/1P	21	B	22	20A/1P	O	1200	~~SLAVE #2 PLC~~	
~~COAGULANT FEED SKID~~ TURBIMETER	1800	O	20A/1P	23	C	24	15A/1P	O	240	~~FE/FIT-104, FE/FIT-204~~	DAMPERS
~~POLYMER FEED SKID #1~~ SPARE	1800	O	20A/1P	25	A	26	15A/1P	O	240	~~FE/FIT-105, FE/FIT-205~~	SPARE
POLYMER FEED SKID #2	1800	O	20A/1P	27	B	28	15A/1P	O	120	FE/FIT-009	
AIR DRYER	1200	O	20A/1P	29	C	30	20A/1P			~~SPARE~~	HEATERS
~~SPARE~~ AIT-019	100		15A/1P	31	A	32	20A/1P			~~SPARE~~	HEATERS
SPARE			15A/1P	33	B	34	20A/1P			~~SPARE~~	OUTSIDE RECEPTACLES
SPARE			15A/1P	35	C	36	20A/1P			SPARE	
~~SPARE~~ SLAVE PLC #2			15A/1P	37	A	38	20A/1P			~~SPARE~~	SLAVE PLC #1
~~SPACE~~ POLYMER FEED SKID #2				39	B	40				~~SPACE~~	POLYMER FEED SKID #1
SPACE POLYMER FEED SKID #2				41	C	42				~~SPACE~~	POLYMER FEED SKID #1

PHASE A=	9215 VA	+100		
PHASE B=	9270 VA		5770 X 125% =	7213
PHASE C	9205 VA	+100	2340 X 100% =	2340
TOTAL	27690 VA	=27790	0 X 50% =	0
			600 X 125% =	750
			0 X 100% =	0
			18980 X 100% =	18980
			0 X 100% =	0
MINIMUM PANEL AMPACITY	81			29383

100 X 100% 100

29383

LIGHTING PANEL LP-1 SCHEDULE

RECORD DRAWINGS

Revisions Drawn by EJA Date 11/2007

THESE RECORD DRAWINGS HAVE BEEN PREPARED, IN PART, ON THE BASIS OF INFORMATION COMPILED BY OTHERS. THEY ARE NOT INTENDED TO REPRESENT IN DETAIL THE EXACT LOCATION, TYPE OF COMPONENT NOR MANNER OF CONSTRUCTION. THE ENGINEER WILL NOT BE RESPONSIBLE FOR ANY ERRORS OR OMISSIONS WHICH HAVE BEEN INCORPORATED INTO THE RECORD DRAWINGS.

THESE DRAWINGS WERE MODIFIED USING AUTOCAD AND REPLOTTED FOR RECORD PURPOSES AND THEREFORE DO NOT HAVE THE ENGINEER'S STAMP OR OTHER SIGNATURES THAT APPEAR ON THE ORIGINAL CONTRACT DRAWINGS.

DSGN	R. LECZNAR
DR	E. ARMIJO
CHK	G. KOPPELMANN
APVD	M. GROSS

NO.	DATE	REVISION	BY	APVD
1	6/28/06	ADDENDUM 2	WP	MG

VERIFY SCALE
BAR IS ONE INCH ON ORIGINAL DRAWING.
0 1"
IF NOT ONE INCH ON THIS SHEET, ADJUST SCALES ACCORDINGLY.

Sdg inc. CH2MHILL

BLOOMFIELD, NEW MEXICO
WATER TREATMENT PLANT UPGRADE

ELECTRICAL
BACKWASH PUMP STATION PROCESS AND FACILITY PLAN, LIGHTING FIXTURE AND PANEL SCHEDULES

SHEET	44 OF 47
DWG	70-E-6
DATE	JUNE 2006
PROJ	342630

FILENAME: 70_70E6d_342630.dwg PLOT DATE: 28-Jun-2006 PLOT TIME: 14:28:53

© CH2M HILL
THIS DOCUMENT, AND THE IDEAS AND DESIGNS INCORPORATED HEREIN, AS AN INSTRUMENT OF PROFESSIONAL SERVICE, IS THE PROPERTY OF CH2M HILL AND IS NOT TO BE USED, IN WHOLE OR IN PART, FOR ANY OTHER PROJECT WITHOUT THE WRITTEN AUTHORIZATION OF CH2MHILL.
REUSE OF DOCUMENTS:

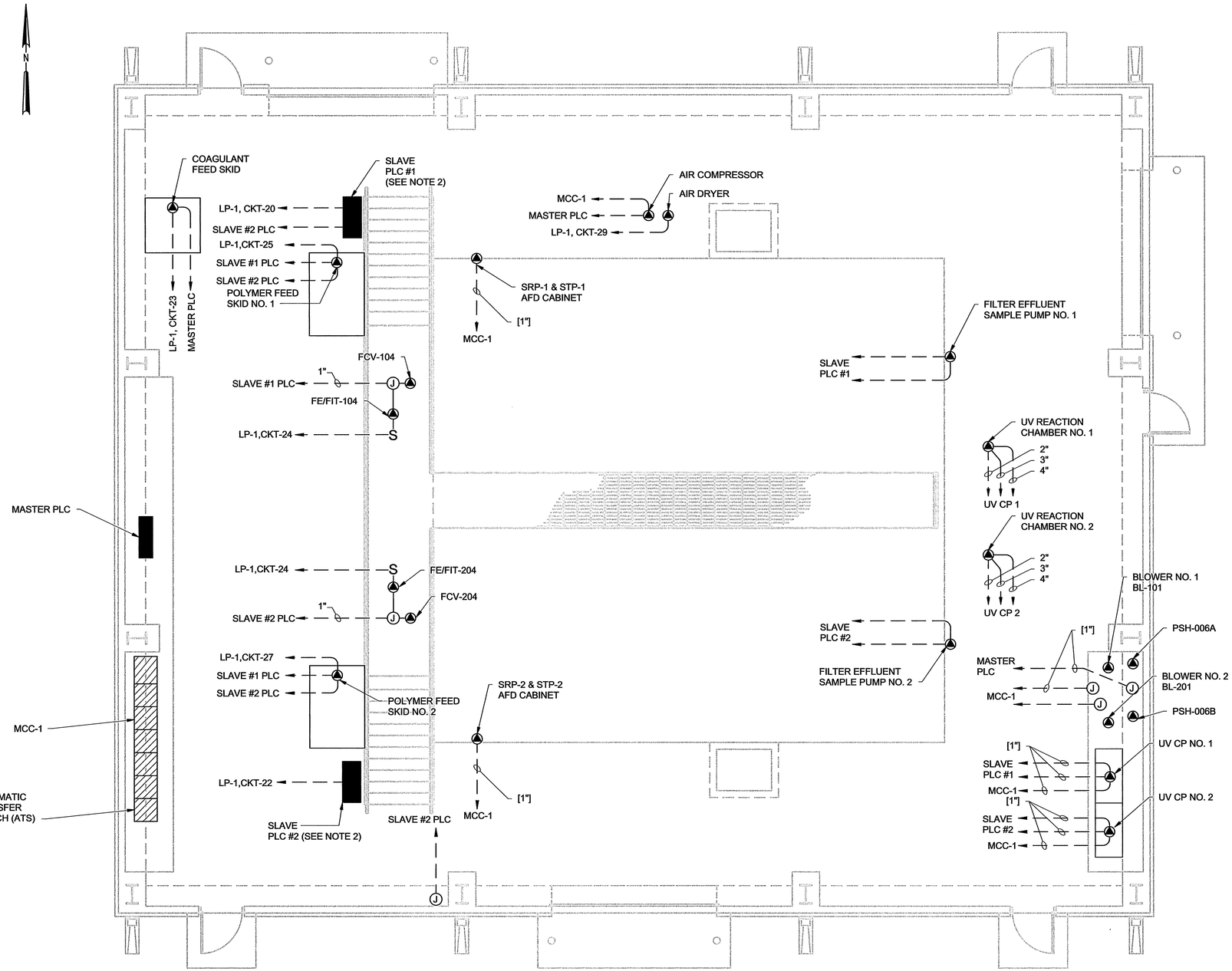

NOTES:

1. ALL CONDUITS SHOWN SHALL BE UNDERSLAB 3/4", SCH 40, PVC UNLESS OTHERWISE NOTED.
2. CONTRACTOR TO PROVIDE FREE STANDING SUPPORT FOR PLC.

© CH2M HILL

THIS DOCUMENT, AND THE IDEAS AND DESIGNS INCORPORATED HEREIN, AS AN INSTRUMENT OF PROFESSIONAL SERVICE, IS THE PROPERTY OF CH2M HILL AND IS NOT TO BE USED, IN WHOLE OR IN PART, FOR ANY OTHER PROJECT WITHOUT THE WRITTEN AUTHORIZATION OF CH2MHILL.

REUSE OF DOCUMENTS:

RECORD DRAWINGS

Revisions Drawn by E.JA Date 11/2007

THESE RECORD DRAWINGS HAVE BEEN PREPARED, IN PART, ON THE BASIS OF INFORMATION COMPILED BY OTHERS. THEY ARE NOT INTENDED TO REPRESENT IN DETAIL THE EXACT LOCATION, TYPE OF COMPONENT NOR MANNER OF CONSTRUCTION. THE ENGINEER WILL NOT BE RESPONSIBLE FOR ANY ERRORS OR OMISSIONS WHICH HAVE BEEN INCORPORATED INTO THE RECORD DRAWINGS.

UNDER SLAB CONDUIT PLAN

1/4" = 1'-0"

THESE DRAWINGS WERE MODIFIED USING AUTOCAD AND REPLOTTED FOR RECORD PURPOSES AND THEREFORE DO NOT HAVE THE ENGINEER'S STAMP OR OTHER SIGNATURES THAT APPEAR ON THE ORIGINAL CONTRACT DRAWINGS.

DSGN	B. PIEPER
DR	G. KOPPELMANN
CHK	
APVD	

NO.	DATE	REVISION	BY	APVD

VERIFY SCALE

BAR IS ONE INCH ON ORIGINAL DRAWING. 0 1"

IF NOT ONE INCH ON THIS SHEET, ADJUST SCALES ACCORDINGLY.

Sdg inc. CH2MHILL

BLOOMFIELD, NEW MEXICO
WATER TREATMENT PLANT
UPGRADE

ELECTRICAL
TREATMENT BUILDING
UNDER-SLAB CONDUIT
ROUTING PLAN

SHEET	45 OF 47
DWG	70-E-7
DATE	MAY 2006
PROJ	342630

FILENAME: 70_70E7d_342630.dwg PLOT DATE: 28-Jun-2006 PLOT TIME: 14:18:01

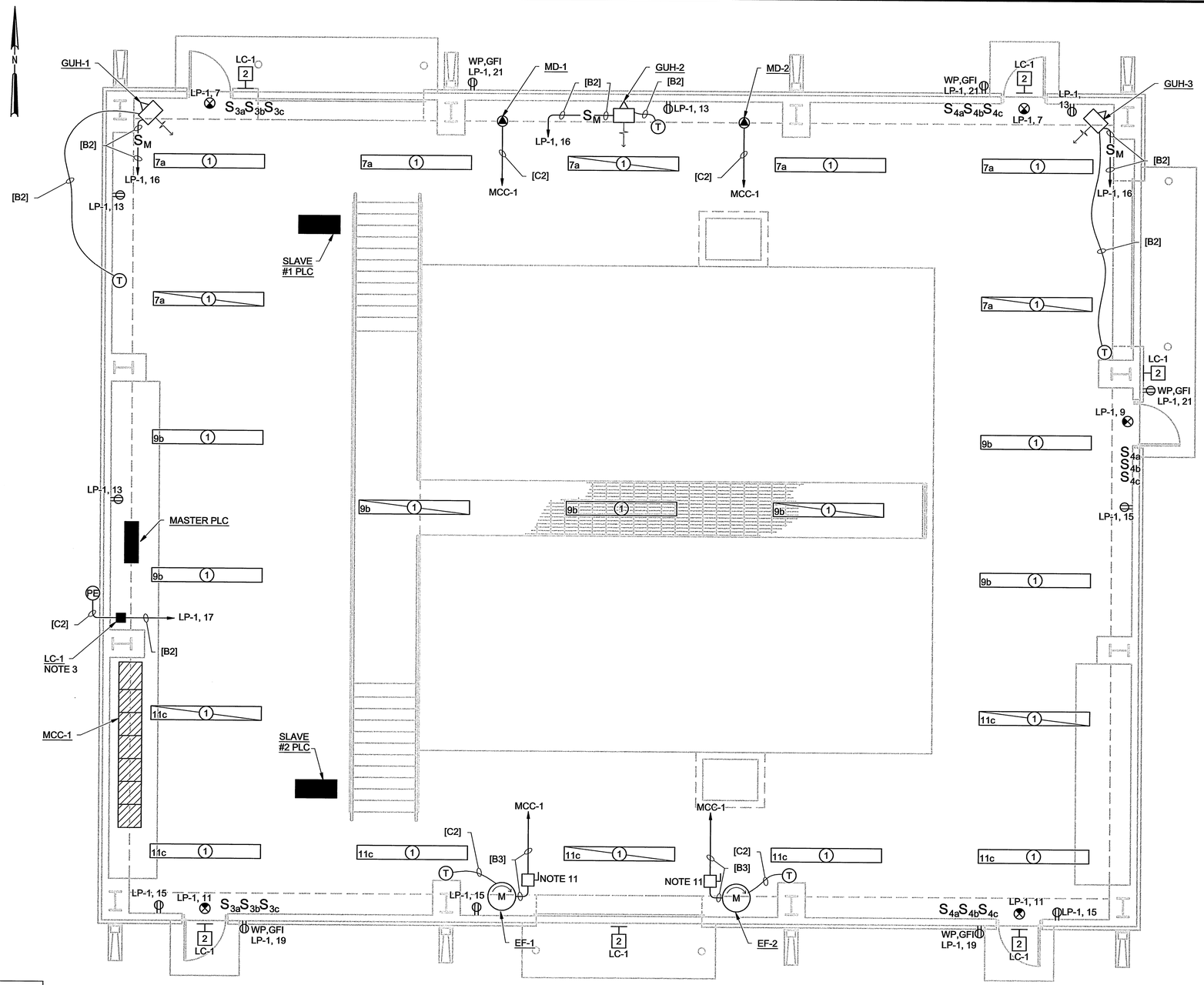

FACILITY PROCESS PLAN

1/4" = 1'-0"

NOTES:

1. ALL EXTERIOR RECEPTACLES SHALL BE GFI, WEATHERPROOF TYPE II. ALL CIRCUITS FEEDING RECEPTACLES SHALL BE 2#12, 1#12G, MIN. SEE PANEL SCHEDULE FOR CIRCUITING.
2. ALL INTERIOR LIGHTING CIRCUITS SHALL CONSIST OF 2#12, 1#12G, MIN. CONTRACTOR SHALL INSTALL ONE ADDITONAL UNSWITCHED CONDUCTOR TO TYPE 1 UNSWITCHED LUMINAIRES AS SHOWN. SEE PANEL SCHEDULE FOR CIRCUITING.
3. MOUNT PHOTOELECTRIC SENSOR ON EXTERIOR OF BUILDING AND CONNECT TO LC-1 FOR EXTERIOR LIGHTING CONTROL. PHOTOCELL SHALL BE MOUNTED IN WEATHERPROOF ENCLOSURE. SEE SCHEMATIC ON DWG 70-E-6.
4. AT CONTRACTORS OPTION, ALL FEEDER CONDUITS SUPPLYING POWER TO EQUIPMENT SHOWN ON THIS SHEET CAN BE ROUTED BENEATH THE SLAB. COORDIANTE UNDER SLAB CONDUIT ROUTING WITH CIRCUITS SHOWN ON DWG 70-E-7. ALL CONDUITS BENEATH THE SLAB SHALL BE SCH 40 PVC.
5. ALL TYPE 1 FIXTURES EXCEPT THOSE MOUNTED ABOVE THE WALKWAY SHALL BE MOUNTED 14'-0" AFF.
6. ALL TYPE 1 FIXTURES MOUNTED ABOVE THE WALKWAY SHALL BE MOUNTED 7'-0" ABOVE WALKWAY.
7. ALL EXIT LIGHTS SHALL BE MOUNTED 1'-0" ABOVE TOP OF DOOR. EXIT LIGHTS SHALL BE POWERED FROM AN UNSWITCHED CONDUCTOR FROM CIRCUIT SHOWN.
8. ALL TYPE 2 FIXTURES SHALL BE MOUNTED 9'-0" AFG.
9. LIGHT FIXTURES SHALL BE LOCATED TO AVOID INTERFERENCE WITH ALL HVAC AND PROCESS EQUIPMENT. COORDINATE ALL FIXTURE RELOCATIONS WITH ENGINEER RPIOR TO FINAL INSTALLATION.
10. ALL LUMINAIRE MOUNTING HEIGHTS ARE TO BOTTOM OF FIXTURE.
11. CONTRACTOR SHALL PROVIDE A 3-POLE MOTOR RATED SWITCH OR A 3-POLE DISCONNECT. SWITCH SHALL BE RATED 20 AMPS MIN.

RECORD DRAWINGS

Revisions Drawn by EJA Date 11/2/2007

THESE RECORD DRAWINGS HAVE BEEN PREPARED, IN PART, ON THE BASIS OF INFORMATION COMPILED BY OTHERS. THEY ARE NOT INTENDED TO REPRESENT IN DETAIL THE EXACT LOCATION, TYPE OF COMPONENT NOR MANNER OF CONSTRUCTION. THE ENGINEER WILL NOT BE RESPONSIBLE FOR ANY ERRORS OR OMISSIONS WHICH HAVE BEEN INCORPORATED INTO THE RECORD DRAWINGS.

© CH2M HILL

REUSE OF DOCUMENTS: THIS DOCUMENT, AND THE IDEAS AND DESIGNS INCORPORATED HEREIN, AS AN INSTRUMENT OF PROFESSIONAL SERVICE, IS THE PROPERTY OF CH2M HILL AND IS NOT TO BE USED, IN WHOLE OR IN PART, FOR ANY OTHER PROJECT WITHOUT THE WRITTEN AUTHORIZATION OF CH2MHILL

THESE DRAWINGS WERE MODIFIED USING AUTOCAD AND REPLOTTED FOR RECORD PURPOSES AND THEREFORE DO NOT HAVE THE ENGINEER'S STAMP OR OTHER SIGNATURES THAT APPEAR ON THE ORIGINAL CONTRACT DRAWINGS.

DSGN	B. PIEPER
DR	E KRISTEL
CHK	
APVD	

NO.	DATE	REVISION	BY	APVD

VERIFY SCALE

BAR IS ONE INCH ON ORIGINAL DRAWING. 0 1"

IF NOT ONE INCH ON THIS SHEET, ADJUST SCALES ACCORDINGLY.

Sdg inc. CH2MHILL

BLOOMFIELD, NEW MEXICO
WATER TREATMENT PLANT
UPGRADE

ELECTRICAL
TREATMENT BUILDING
FACILITY PLAN

SHEET	46 OF 47
DWG	70-E-8
DATE	MAY 2006
PROJ	342630

FILENAME:70_70E8d_342630.dwg PLOT DATE: 28-Jun-2006 PLOT TIME: 14:15:08

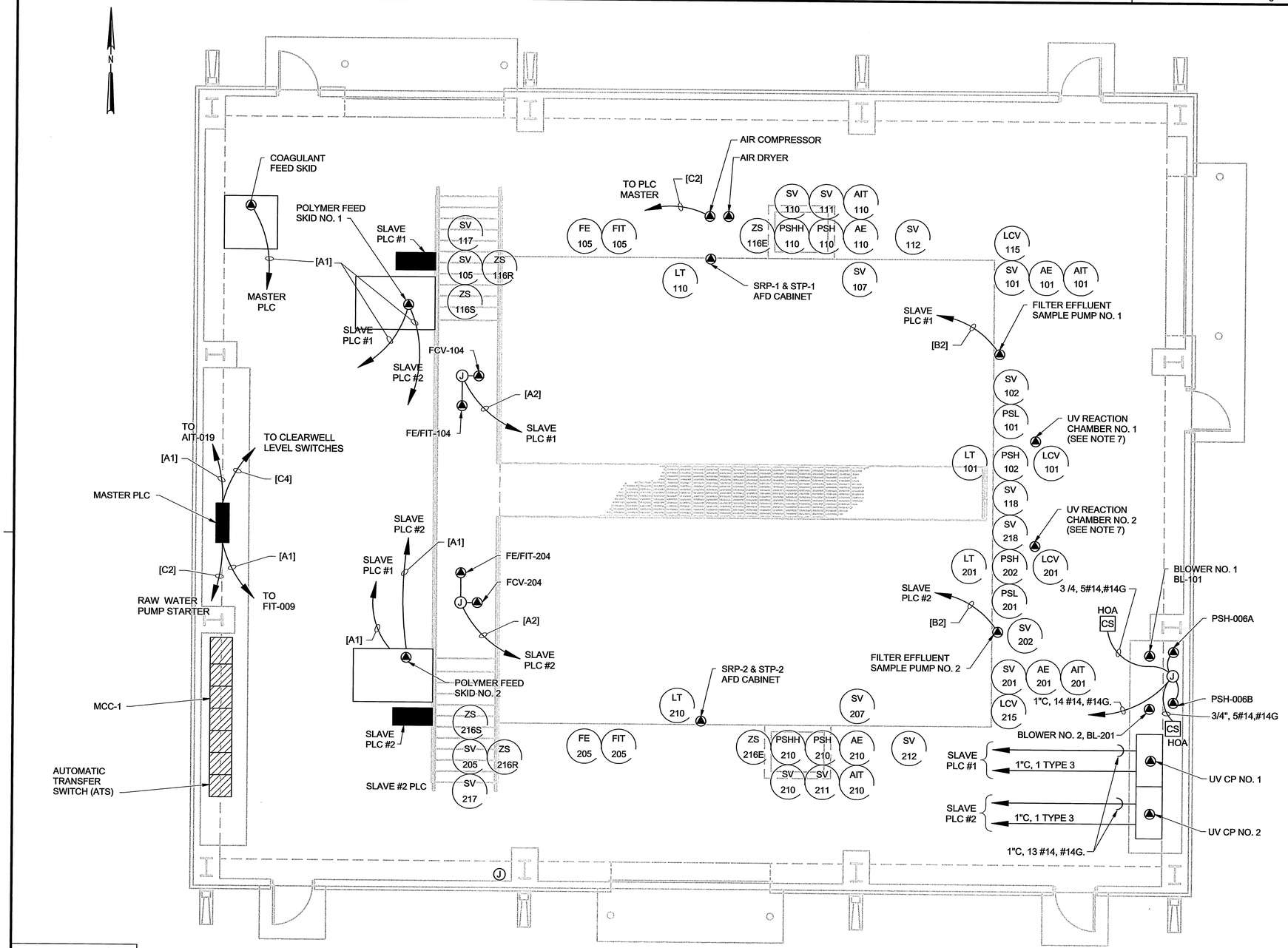

NOTES:

1. ALL CONDUITS SHOWN SHALL BE ¾", SCH 40, PVC UNLESS OTHERWISE NOTED.
2. LOCATIONS OF DEVICES SHOWN ARE APPROXIMATE.
3. ALL INSTRUMENTS ARE CONNECTED TO THE CORRESPONDING PLC SLAVE.
4. PLC DISCRETE INPUTS AND OUTPUTS, ANALOG SIGNALS, LOW VOLTAGE DC SIGNALS AND 120V AC POWER TO INSTRUMENTS SHALL ALL BE SEPARATE CONDUIT SYSTEMS FOR EACH FILTER.
5. CIRCUITS TO SV'S, PS'S, AND ZS'S SHALL BE [C2].
6. SIGNAL CIRCUITS TO LT'S, FIT'S, AIT'S, LCV'S, AND FCV'S SHALL BE [A1].
7. CONTRACTOR SHALL INSTALL FOR EACH UV SYSTEM, THE FOLLOWING CABLES FURNISHED BY THE UV SYSTEM MANUFACTURER.

3" bracket:
   a) 1 - UV CHAMBER TEMPERATURE SENSOR, ONE - 2/C, 0.51" O.D.
   b) 1 - EXCESS TEMPERATURE SENSOR, ONE - 2/C CABLE, 0.53" O.D.
   c) CLEANING PULSE SENSOR, ONE - 3/C CABLE, 0.66 O.D.
   d) 6 - UV SENSOR CABLES, O.D. = 0.51"

4" bracket:
   e) 1 - CLEANING MOTOR SUPPLY, ONE - 4/C CABLE, 0.79" O.D.
   f) 6 - LAMP POWER CABLES 0.84" O.D.

© CH2M HILL

THIS DOCUMENT, AND THE IDEAS AND DESIGNS INCORPORATED HEREIN, AS AN INSTRUMENT OF PROFESSIONAL SERVICE, IS THE PROPERTY OF CH2M HILL AND IS NOT TO BE USED, IN WHOLE OR IN PART, FOR ANY OTHER PROJECT WITHOUT THE WRITTEN AUTHORIZATION OF CH2MHILL.

REUSE OF DOCUMENTS:

RECORD DRAWINGS

Revisions Drawn by EJA Date 11/2007

THESE RECORD DRAWINGS HAVE BEEN PREPARED, IN PART, ON THE BASIS OF INFORMATION COMPILED BY OTHERS. THEY ARE NOT INTENDED TO REPRESENT IN DETAIL THE EXACT LOCATION, TYPE OF COMPONENT NOR MANNER OF CONSTRUCTION. THE ENGINEER WILL NOT BE RESPONSIBLE FOR ANY ERRORS OR OMISSIONS WHICH HAVE BEEN INCORPORATED INTO THE RECORD DRAWINGS.

FILTER BUILDING PROCESS PLAN

1/4" = 1'-0"

THESE DRAWINGS WERE MODIFIED USING AUTOCAD AND REPLOTTED FOR RECORD PURPOSES AND THEREFORE DO NOT HAVE THE ENGINEER'S STAMP OR OTHER SIGNATURES THAT APPEAR ON THE ORIGINAL CONTRACT DRAWINGS.

DSGN	B. PIEPER
DR	E. KRISTEL
CHK	G. KOPPELMANN
APVD	M. GROSS

NO.	DATE	REVISION	BY	APVD
1	6/28/06	ADDENDUM 2	WP	MG

VERIFY SCALE
BAR IS ONE INCH ON ORIGINAL DRAWING.
0 1"
IF NOT ONE INCH ON THIS SHEET, ADJUST SCALES ACCORDINGLY.

Sdg Inc. CH2MHILL

BLOOMFIELD, NEW MEXICO
WATER TREATMENT PLANT
UPGRADE

ELECTRICAL
TREATMENT BUILDING
UNDER-SLAB CONDUIT
ROUTING PLAN

SHEET	47 OF 47
DWG	70-E-9
DATE	MAY 2006
PROJ	342630

FILENAME70_70E9D_342630.DWG PLOT DATE: 28-Jun-2006 PLOT TIME: 14:12:59